MXD-D400

SERVICE MANUAL

US Model

Ver 1.0 2003.05

Self Diagnosis Supported model

US and foreign patents licensed from Dolby Laboratories.

MD Section	Model Name Using Similar Mechanism	NEW
	MD Mechanism Type	MDM-7S2C
	Optical Pick-up Name	KMS-262E
CD Section	Model Name Using Similar Mechanism	NEW
	CD Mechanism Type	CDM66C-30B61M
	Base Unit Name	BU-30BD61B
	Optical Pick-up Name	OP Assy (A-MAX.4T)

SPECIFICATIONS

CD player section

System	Compact Disc digital audio system
Laser	Semiconductor laser (λ=780 nm)
Frequency response	20 Hz – 20 kHz (±0.5 dB)
Wow and flutter	Below measureable limit (±0.001% W.PEAK)

MD deck section

System	MiniDisc digital audio system
Disc	MiniDisc
Laser	Semiconductor laser (λ=780 nm) Emission duration: continuous
Sampling frequency	44.1 kHz
Frequency response	20 Hz – 20 kHz (±0.5 dB)

Inputs

	Jack type	Input impedance	Rated input	Minimum input
ANALOG IN	Pin jack	47 kilohms	500 mVrms	250 mVrms
DIGITAL OPTICAL IN	Squqre optical connector jack	Optical wave length: 660 nm	–	–

Outputs

	Jack type	Rated output	Load impedance
ANALOG OUT	Pin jack	2 Vrms (at 47 kilohms)	Over 10 kilohms
DIGITAL OPTICAL OUT	Squqre optical connector jack	-18 dBm	Optical wave length:660 nm
PHONES	Stereo phone jack	10 mW	32 ohm

General

Power requirements	120 V AC, 60 Hz
Power consumption	19 watts Less than 1 watt (at the power saving mode)
Dimensions (w/h/d) incl. projecting parts and controls	Approx. 430 × 108 × 399 mm
Mass	Approx. 5.4 kg

Supplied accessories

- Audio connection cords (2)
- Remote commander (remote) (1)
- Sony R6 (size-AA) batteries (2)

Design and specifications are subject to change without notice.

COMPACT DISC MINIDISC DECK

9-877-241-01 **Sony Corporation**
2003E05-1 **Home Audio Company**
© 2003.5
Published by Sony Engineering Corporation

SONY®

Downloaded from www.Manualslib.com manuals search engine

SELF-DIAGNOSIS FUNCTION

The self-diagnosis function consists of error codes for customers which are displayed automatically when errors occur, and error codes which show the error history in the test mode during servicing. For details on how to view error codes for the customer, refer to the following box in the instruction manual. For details on how to check error codes during servicing, refer to the following "Procedure for using the Self-Diagnosis Function (Error History Display Mode)".

This deck has a Self-diagnosis display function to let you know if there is a deck malfunction. The display shows a code made up of three or five letters and a message alternately to show you the problem. To solve the problem refer to the following list. If any problem persists, consult your nearest Sony dealer.

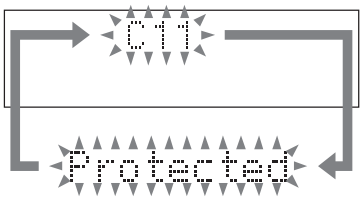

C11/Protected

The MD is protected against erasure.

➔Remove the MD and slide the tab to close the slot.

C12/Cannot Copy

You tried to record a CD with a format that the deck does not support, such as a CD-ROM or MD data.

➔Replace the playable disc.

C13/REC Error

Recording could not be performed properly.

➔Move the deck to a stable place, and start recording over from the beginning.

The MD is dirty or scratched, or the MD does not meet the standards.

➔Replace the MD and start recording over from the beginning.

C13/Read Error

The MD deck cannot read the disc information properly.

➔Remove the MD once, then insert it again.

C14/TOC Error

The MD deck cannot read the disc information properly.

➔Replace the MD.

➔Erase all the recorded contents of the MD using the All Erase Function.

C41/Cannot Copy

The digitally dubbed material cannot be recorded digitally.

C71/Din Unlock

The digitally dubbed material cannot be recorded digitally.

A moment's lighting is due to the signals of the digital program being recorded. This does not affect the recorded material.

The digital optical cable is disconnected, or the power of the connected component is turned off while recording the digital audio from the component connected to the DIGITAL OPTICAL IN jack.

➔Connect the digital optical cable, or turn on the power of the connected component.

E0001/MEMORY NG

The component has internal problem.

➔Consult your nearest Sony dealer.

E0101/LASER NG

There is a problem with the laser pickup.

➔The laser pickup may be damaged. Consult your nearest Sony dealer.

E0201/LOADING NG

There is a problem with the loading.

➔The loading may be failed. Consult your nearest Sony dealer.

PROCEDURE FOR USING THE SELF-DIAGNOSIS FUNCTION (ERROR HISTORY DISPLAY MODE)

Note: Perform the self-diagnosis function in the "error history display mode" in the test mode. The following describes the least required procedure. Be careful not to enter other modes by mistake. If you set other modes accidentally, pull out the AC cord to turn the power off and retry to enter the test mode.

1. Press the [I/⏻] button to turn he power on.
2. Press the [⏮ AMS ⏭] (CD) knob and [INPUT] button at the same time, press the [⏮ AMS ⏭] (MD) knob to display "SYS version".
3. Turn the [⏮ AMS ⏭] (CD) knob and when "MD Test" is displayed, press the [⏮ AMS ⏭] (MD) knob.
4. Turn the [⏮ AMS ⏭] (MD) knob and when "[Service]" is displayed, press the [YES] button.
5. Turn the [⏮ AMS ⏭] (MD) knob to display "Err Display".
6. Press the [YES] button to sets the error history mode and displays "op rec tm".
7. Select the contents to be displayed or executed using the [⏮ AMS ⏭] (MD) knob.
8. Press the [⏮ AMS ⏭] (MD) knob to display or execute the contents selected.
9. Press the [⏮ AMS ⏭] (MD) knob another time returns to step 6.
10. Press the [MENU/NO] button to display "Err Display" and release the error history mode.
11. To release the test mode, press the [⏮ AMS ⏭] (CD) knob and [INPUT] button at the same time, press the [⏮ AMS⏭] (MD) knob.
12. Press the [I/⏻] button to turn the power off.

Downloaded from www.Manualslib.com manuals search engine

ITEMS OF ERROR HISTORY MODE ITEMS AND CONTENTS

Selecting the Test Mode

Display	Details of History
op rec tm	Cumulative recording time is displayed. When cumulative recording time is over 1 minute, the hour and minute are displayed as they are. When it is under 1 minute, “Under 1 min” is displayed. The displayed time shows how long the laser is in high power state. It is about one fourth the actual recording time.
op play tm	Cumulative playing time is displayed. When cumulative playing time is over 1 minute, the hour and minute are displayed as they are. When it is under 1 minute, “Under 1 min” is displayed.
spdl rp tm	Cumulative spindle motor running time is displayed. When cumulative spindle motor run time is over 1 minute, the hour and minute are displayed as they are. When it is under 1 minute, “Under 1 min” is displayed.
retry err	Displays the total number of retries during recording and number of retry errors during play. Displayed as “r□□ p□□”. “r” indicates the retries during recording while “p” indicates the retry errors during play. The number of retries and retry errors are displayed in hexadecimal digits from 00 to FF.
total err	Displays the total number of errors. Displayed as “total □□”. The number of errors is displayed in hexadecimal digits from 00 to FF.
err history	Displays the 10 latest errors. Displayed as “0□ ErrCd@@”. □ indicates the history number. The smaller the number, the more recent is the error. (00 is the latest). @@ indicates the error code. Refer to the following table for the details. The error history can be switched by turning the [⏮ AMS ⏭] (MD) knob.
retry adrs	Displays the past five retry addresses. Displays “□□ ADRS □□□□”, □□ is the history number, □□□□ is the cluster with the retry error. Select the error history number using the [⏮ AMS ⏭] (MD) knob.
er refresh	Mode to clear the error history and retry address history. [Operating method] 1) Press [⏮ AMS ⏭] (MD) knob when “er refresh” is displayed. 2) The display will change to “er refresh?”, and then press [YES] button. The operation is over if “Complete!” is displayed. After this mode was executed, check the following: • The data have been cleared. • Perform the recording and playing to check that the mechanism operates normally.
tm refresh	Mode to clear the “op rec tm” and “op play tm” histories. These histories serve as approximate indications of when to replace the optical pick-up. If the optical pick-up has been replaced, perform this operation and clear the history. [Operating method] 1) Press [⏮ AMS ⏭] (MD) knob when “tm refresh” is displayed. 2) The display will change to “tm refresh?”, and then press [YES] button. The operation is over if “Complete!” is displayed. After this mode was executed, check the following: • The data have been cleared. • Perform the recording and playing to check that the mechanism operates normally.
op change	Mode to clear cumulative time of “op rec tm” and “op play tm”. These historical data are used to determine the timing when the optical pick-up is to be replaced. When the optical pick-up was replaced, perform this operation to clear historical data. [Operating method] 1) Press [⏮ AMS ⏭] (MD) knob when “op change” is displayed. 2) The display will change to “op chang?”, and then press [YES] button. The operation is over if “Complete!” is displayed.
spdl change	Mode to clear cumulative time of “spdl rp tm”. This historical data is used to determine the timing when the spindle motor is to be replaced. When the spindle motor was replaced, perform this operation to clear historical data. [Operating method] 1) Press [⏮ AMS ⏭] (MD) knob when “spdl change” is displayed. 2) The display will change to “spdl chang?”, and then press [YES] button. The operation is over if “Complete!” is displayed.

Downloaded from www.Manualslib.com manuals search engine

Table of Error Codes

Error Code	Details of Error
10	Loading failed
12	Loading switch combination is illegal
20	Head of PTOC could not be read within the specified time
21	Head of PTOC could be read but its content is erroneous
22	Access to UTOC could not be made within the specified time
23	UTOC could be not read within the specified 3time
24	Content of UTOC is erroneous
30	Playing could not start
31	Content of sector is erroneous
40	Cause of retry occurred during normal recording
41	D-RAM overflowed and retry was executed
42	Retry was executed during the writing to TOC
43	S.F editing was interrupted by retry
50	Address could not be read except in access processing
51	Focusing failed and it is out of control
60	Unlock retry

Downloaded from www.Manualslib.com manuals search engine

TABLE OF CONTENTS

SELF-DIAGNOSIS FUNCTION 2

1. SERVICING NOTES 7

2. GENERAL 16

3. DISASSEMBLY
3-1. Disassembly Flow 17
3-2. Case (409538) 18
3-3. Loading Panel (CD) 18
3-4. MD Mechanism Deck (MDM-7S2C) 19
3-5. CD Mechanism Deck (CDM66C-30B61C) 19
3-6. Transformer Board 20
3-7. Main Board 20
3-8. Front Panel Block Section 21
3-9. Holder Section 21
3-10. Over Write Head (HR901) 22
3-11. Optical Pick-up (KMS-262E) 22
3-12. BD (MD) Board 23
3-13. Loading Motor Assembly (M103), Spindle Motor Assembly (M101), Sled Motor Assembly (M102) 23
3-14. Tray (66) 24
3-15. BD (CD) Board 25
3-16. Optical Block Section 25

4. TEST MODE 26

5. ELECTRICAL ADJUSTMENTS
MD Section 32
CD Section 44

6. DIAGRAMS
6-1. Block Diagram – CD Section – 46
6-2. Block Diagram – MD Section – 47
6-3. Block Diagram – MAIN Section – 48
6-4. Note for Printed Wiring Boards and Schematic Diagrams 49
6-5. Printed Wiring Board – BD (CD) Section – 50
6-6. Schematic Diagram – BD (CD) Section – 51
6-7. Schematic Diagram – BD (MD) Board (1/2) – 52
6-8. Schematic Diagram – BD (MD) Board (2/2) – 53
6-9. Printed Wiring Board – BD (MD) Board – 54
6-10. Printed Wiring Board – MAIN Board (Component Side) – 56
6-11. Printed Wiring Board – MAIN Board (Conductor Side) – 57
6-12. Schematic Diagram – MAIN Board (1/4) – 58
6-13. Schematic Diagram – MAIN Board (2/4) – 59
6-14. Schematic Diagram – MAIN (3/4)/LOADING Boards – 60
6-15. Schematic Diagram – MAIN Board (4/4) – 61
6-16. Printed Wiring Boards – Panel Section – 62
6-17. Schematic Diagram – Panel Section – 63
6-18. Printed Wiring Board – TRANSFORMER Board – 64
6-19. Schematic Diagram – TRANSFORMER Board – 65
6-20. IC Pin Function Description 74

7. EXPLODED VIEWS
7-1. Overall Section 83
7-2. Front Panel Section 84
7-3. Chassis Section 85
7-4. MD Mechanism Deck Section-1 (MDM-7S2C) 86
7-5. MD Mechanism Deck Section-2 (MDM-7S2C) 87
7-6. CD Mechanism Deck Section (CDM66C-30B61M) 88
7-7. Base Unit Section (BU-30BD61M) 89

8. ELECTRICAL PARTS LIST 90

Downloaded from www.Manualslib.com manuals search engine

SAFETY CHECK-OUT

After correcting the original service problem, perform the following safety check before releasing the set to the customer:
Check the antenna terminals, metal trim, "metallized" knobs, screws, and all other exposed metal parts for AC leakage.
Check leakage as described below.

LEAKAGE TEST

The AC leakage from any exposed metal part to earth ground and from all exposed metal parts to any exposed metal part having a return to chassis, must not exceed 0.5 mA (500 microamperes.). Leakage current can be measured by any one of three methods.

1. A commercial leakage tester, such as the Simpson 229 or RCA WT-540A. Follow the manufacturers' instructions to use these instruments.
2. A battery-operated AC milliammeter. The Data Precision 245 digital multimeter is suitable for this job.
3. Measuring the voltage drop across a resistor by means of a VOM or battery-operated AC voltmeter. The "limit" indication is 0.75 V, so analog meters must have an accurate low-voltage scale. The Simpson 250 and Sanwa SH-63Trd are examples of a passive VOM that is suitable. Nearly all battery operated digital multimeters that have a 2 V AC range are suitable. (See Fig. A)

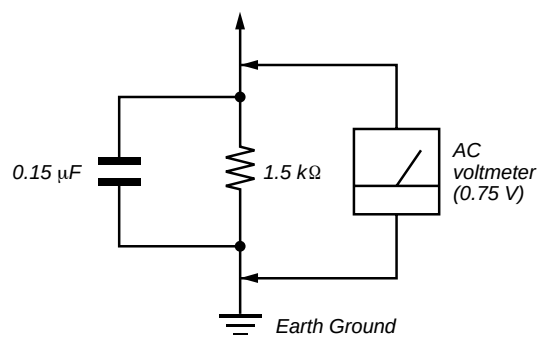

Fig. A. Using an AC voltmeter to check AC leakage.

This appliance is classified as a CLASS 1 LASER product. The CLASS 1 LASER PRODUCT MARKING is located on the rear exterior.

The following caution label is located inside of the apparatus.

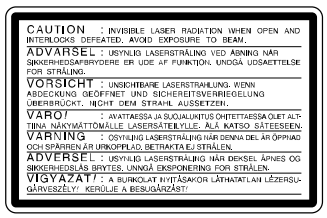

> CAUTION
> Use of controls or adjustments or performance of procedures other than those specified herein may result in hazardous radiation exposure.

Notes on chip component replacement

- Never reuse a disconnected chip component.
- Notice that the minus side of a tantalum capacitor may be damaged by heat.

Flexible Circuit Board Repairing

- Keep the temperature of the soldering iron around 270 ˚C during repairing.
- Do not touch the soldering iron on the same conductor of the circuit board (within 3 times).
- Be careful not to apply force on the conductor when soldering or unsoldering.

UNLEADED SOLDER

Boards requiring use of unleaded solder are printed with the lead-free mark (LF) indicating the solder contains no lead.
(Caution: Some printed circuit boards may not come printed with the lead free mark due to their particular size)

: LEAD FREE MARK

Unleaded solder has the following characteristics.

- Unleaded solder melts at a temperature about 40 ˚C higher than ordinary solder.
  Ordinary soldering irons can be used but the iron tip has to be applied to the solder joint for a slightly longer time.
  Soldering irons using a temperature regulator should be set to about 350 ˚C.
  Caution: The printed pattern (copper foil) may peel away if the heated tip is applied for too long, so be careful!
- Strong viscosity
  Unleaded solder is more viscou-s (sticky, less prone to flow) than ordinary solder so use caution not to let solder bridges occur such as on IC pins, etc.
- Usable with ordinary solder
  It is best to use only unleaded solder but unleaded solder may also be added to ordinary solder.

SAFETY-RELATED COMPONENT WARNING!!

COMPONENTS IDENTIFIED BY MARK ⚠ OR DOTTED LINE WITH MARK ⚠ ON THE SCHEMATIC DIAGRAMS AND IN THE PARTS LIST ARE CRITICAL TO SAFE OPERATION. REPLACE THESE COMPONENTS WITH SONY PARTS WHOSE PART NUMBERS APPEAR AS SHOWN IN THIS MANUAL OR IN SUPPLEMENTS PUBLISHED BY SONY.

Downloaded from www.Manualslib.com manuals search engine

SECTION 1
SERVICING NOTES

NOTES ON HANDLING THE OPTICAL PICK-UP BLOCK OR BASE UNIT

The laser diode in the optical pick-up block may suffer electrostatic break-down because of the potential difference generated by the charged electrostatic load, etc. on clothing and the human body.
During repair, pay attention to electrostatic break-down and also use the procedure in the printed matter which is included in the repair parts.
The flexible board is easily damaged and should be handled with care.

For CD

NOTES ON LASER DIODE EMISSION CHECK

The laser beam on this model is concentrated so as to be focused on the disc reflective surface by the objective lens in the optical pick-up block. Therefore, when checking the laser diode emission, observe from more than 30 cm away from the objective lens.

LASER DIODE AND FOCUS SEARCH OPERATION CHECK

Carry out the “S curve check” in “CD section adjustment” and check that the S curve waveforms is output three times.

For MD

NOTES ON LASER DIODE EMISSION CHECK

Never look into the laser diode emission from right above when checking it for adjustment. It is feared that you will lose your sight.

CLEANING OBJECTIVE LENS OF OPTICAL PICK-UP

- In cleaning the objective lens of optical pick-up, be sure the following below.

1. In cleaning the lens, do not apply an excessive force.
   As the optical pick-up is vulnerable, application of excessive force could damage the lens holder.
2. In cleaning, do not use a cleaner other than exclusive cleaning liquid (KK-91 or isopropyl alcohol).
3. Wipe the objective lens spirally from center toward outside. (See Figure A)

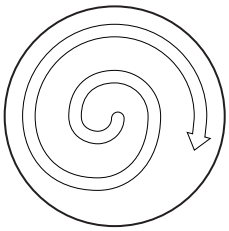

(Figure A)

4. Eject the disk, if loaded.
5. Disconnect the power cord from the socket to shut off the power supply.

HOW TO OPEN THE LOADING PANEL (CD) WHEN POWER SWITCH IS OFF

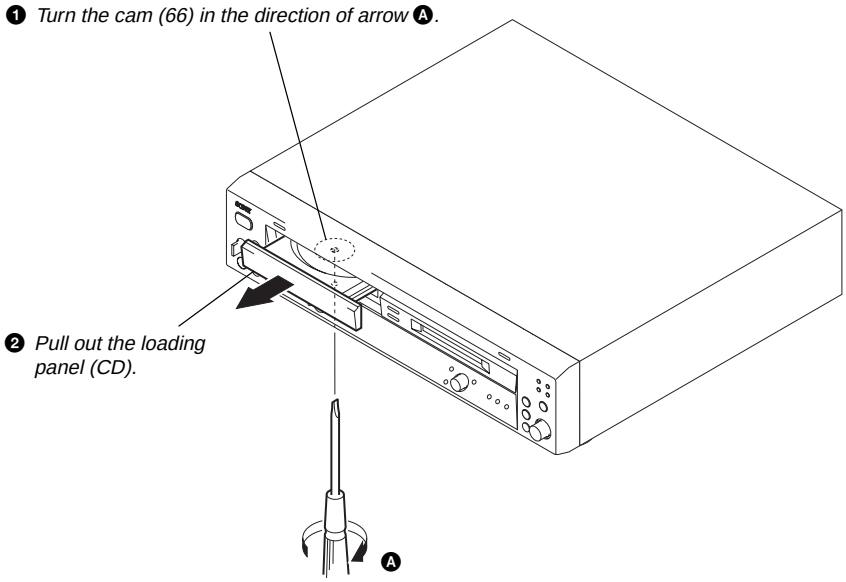

Downloaded from www.Manualslib.com manuals search engine

SERVICE POSITION

– Main board –

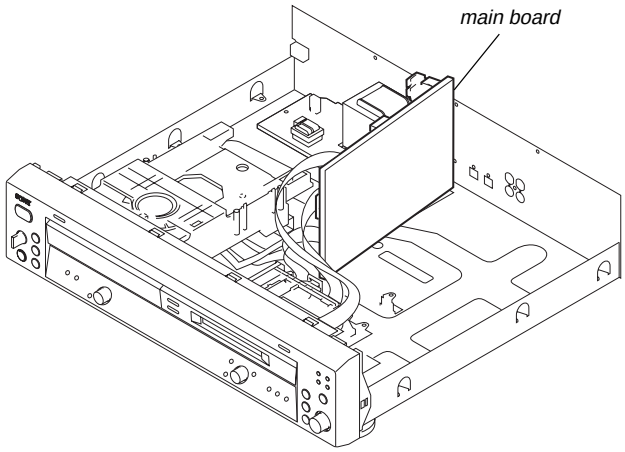

– Front panel block section –

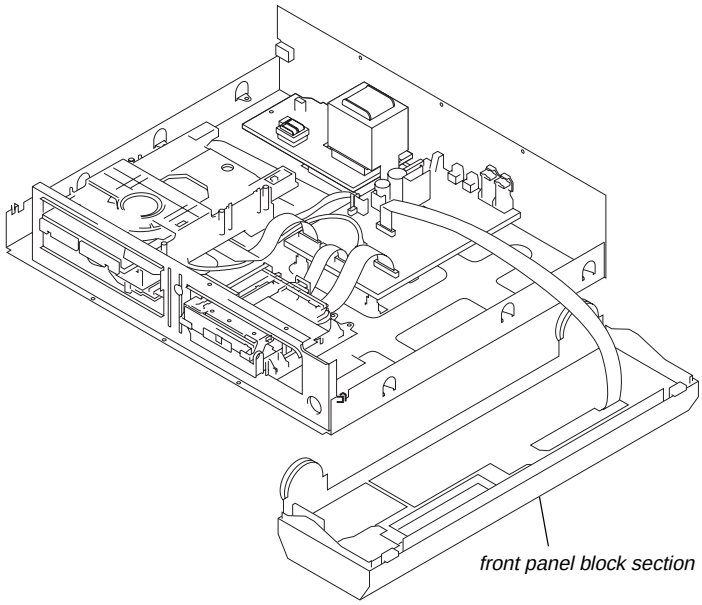

Downloaded from www.Manualslib.com manuals search engine

– MD mechanism deck –

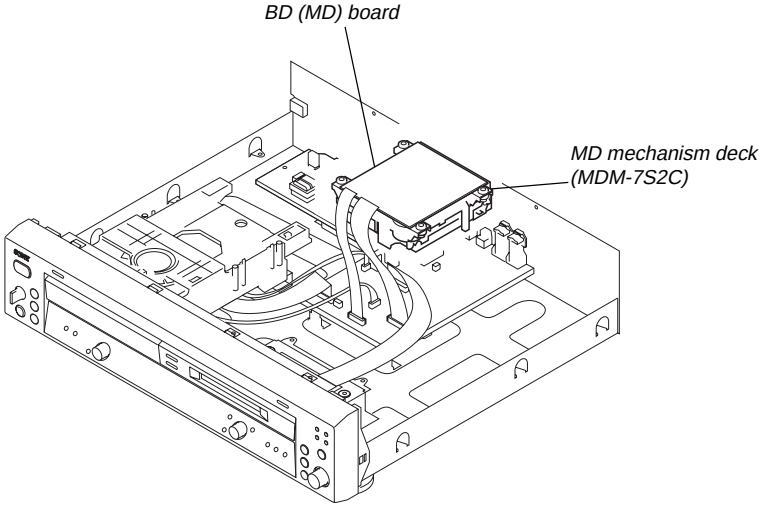

– CD mechanism deck –

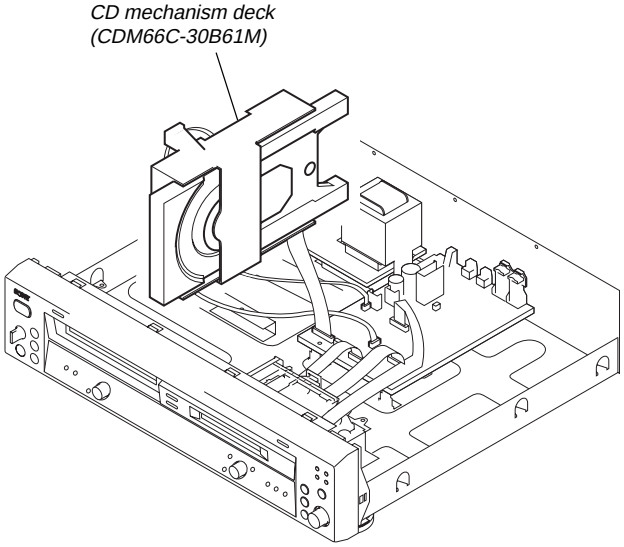

Downloaded from www.Manualslib.com manuals search engine

NOTE FOR POSITION OF THE CABLE (4P)

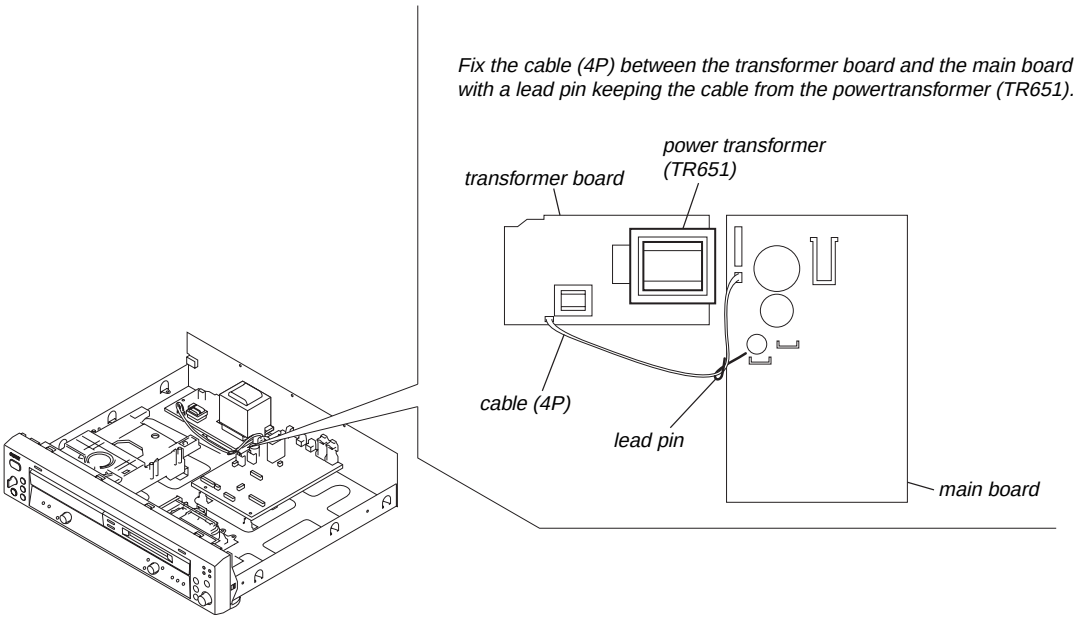

Downloaded from www.Manualslib.com manuals search engine

MD SECTION

JIG FOR CHECKING BD (MD) BOARD WAVEFORM

The special jig (J-2501-196-A) is useful for checking the waveform of the BD (MD) board. The names of terminals and the checking items to be performed are shown as follows.

GND : Ground
I+3V : For measuring IOP (Check the deterioration of the optical pick-up laser)
IOP : For measuring IOP (Check the deterioration of the optical pick-up laser)
TE : Tracking error signal (Traverse adjustment)
VC : Reference level for checking the signal
RF : RF signal (Check jitter)
FE : Focus error signal

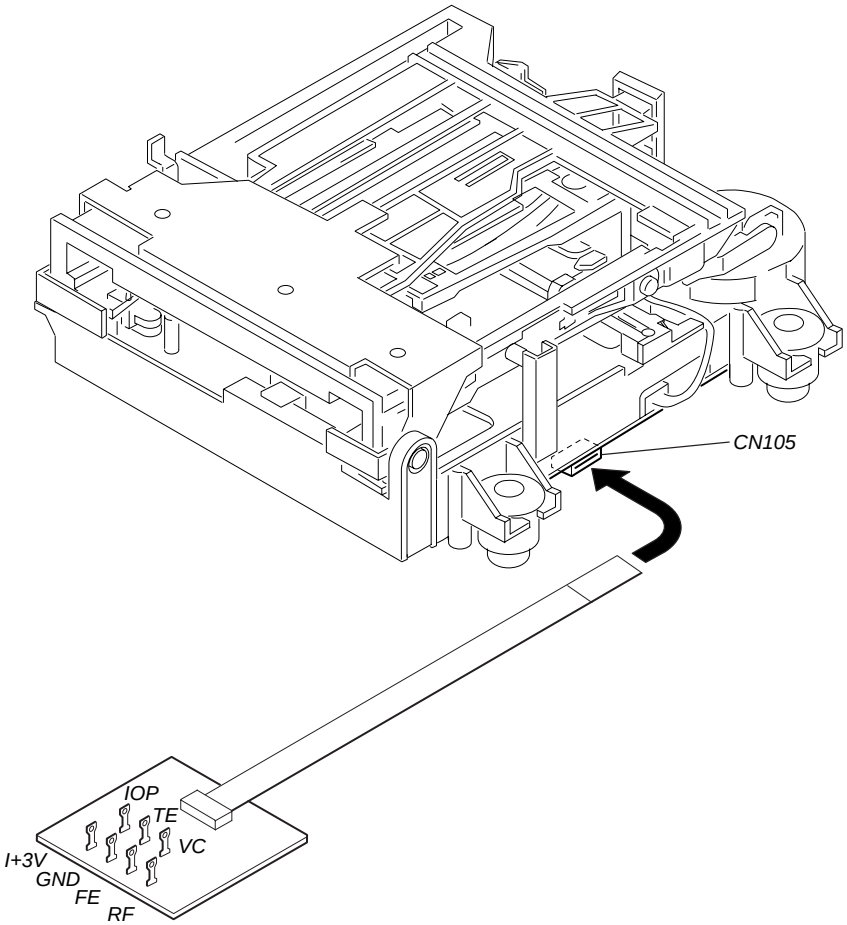

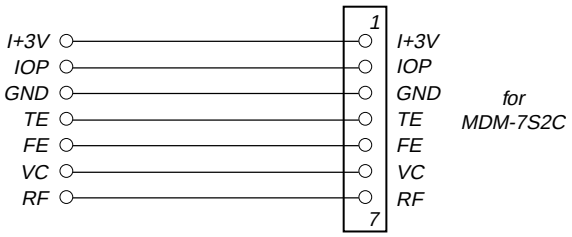

Downloaded from www.Manualslib.com manuals search engine

IOP DATA RECORDING AND DISPLAY WHEN OPTICAL PICK-UP AND NON-VOLATILE MEMORY (IC195 OF BD (MD) BOARD) ARE REPLACED

The IOP value labeled on the optical pick-up can be recorded in the non-volatile memory. By recording the value, it will eliminate the need to look at the value on the optical pick-up label. When replacing the optical pick-up or non-volatile memory (IC195 of BD (MD) board), record the IOP value on the optical pick-up according to the following procedure.

Record Procedure:

1. Press the I/⏻ button to turn on the power.
2. Press the ⏮ AMS ⏭ (CD) knob and INPUT button at the same time, press the ⏮ AMS ⏭ (MD) knob to display "SYS version".
3. Turn the ⏮ AMS ⏭ (CD) knob and when "MD Test" is displayed, press the ⏮ AMS ⏭ (MD) knob.
4. Turn the ⏮ AMS ⏭ (MD) knob to display "[Service]", and press the YES button.
5. Turn the ⏮ AMS ⏭ (MD) knob to display "Iop Write" (C05), and press the YES button.
6. The display becomes "Ref=@@@.@" (@ is an arbitrary number) and the numbers which can be changed will blink.
7. Input the IOP value written on the optical pick-up label.
   To select the number : Turn the ⏮ AMS ⏭ (MD) knob.
   To select the digit : Press the ⏮ AMS ⏭ (MD) knob.
8. When the YES button is pressed, the display becomes "Measu=@@@.@" (@ is an arbitrary number).
9. As the adjustment results are recorded for the 4 value. Leave it as it is and press the YES button.
10. "Complete!" will be displayed momentarily. The value will be recorded in the non-volatile memory and the display will become "Iop Write (C05)".
11. Press the MENU/NO button to display "MD Test".
12. Press the I/⏻ button to turn the power off.

Display Procedure:

1. Press the I/⏻ button to turn on the power.
2. Press the ⏮ AMS ⏭ (CD) knob and INPUT button at the same time, press the ⏮ AMS ⏭ (MD) knob to display "SYS version".
3. Turn the ⏮ AMS ⏭ (CD) knob and when "MD Test" is displayed, press the ⏮ AMS ⏭ (MD) knob.
4. Turn the ⏮ AMS ⏭ (MD) knob to display "[Service]", and press the YES button.
5. Turn the ⏮ AMS ⏭ (MD) knob to display "Iop Read" (C26), and press the YES button.
6. "@@.@/##.#" is displayed and the recorded contents are displayed.
   @@.@ : indicates the IOP value on the optical pick-up label.
   ##.# : indicates the IOP value after adjustment
7. To end, press the MENU/NO button to display "Iop Read" (C26).
8. Press the MENU/NO button to display "MD Test".
9. Press the I/⏻ button to turn the power off.

Downloaded from www.Manualslib.com manuals search engine

CHECKS PRIOR TO PARTS REPLACEMENT AND ADJUSTMENTS IN MD

Before performing repairs, perform the following checks to determine the faulty locations up to a certain extent.
Details of the procedures are described in “5 Electrical Adjustments”.

	Criteria for Determination (Unsatisfactory if specified value is not satisfied)	Measure if unsatisfactory:
Laser power check (5-7-2 : See page 36)	• 0.93 mW power Specified value : 0.84 to 0.92 mW (KMS-262A) 0.90 to 0.96 mW (KMS-262E) • 8.65 mW power Specified value : 8.1 to 8.7 mW (KMS-262A) 8.4 to 8.9 mW (KMS-262E)	• Clean the optical pick-up • Adjust again • Replace the optical pick-up
	• Iop (at 8.65mW) Labeled on the optical pick-up Iop value ± 10mA	• Replace the optical pick-up
Auto check (5-7-4 : See page 37)	• Unsatisfactory if displayed as “NG: XXXX” NG (XXXX is arbitrary number)	• Replace the optical pick-up
Temperature compensation offset check (5-7-1 : See page 36)	• Unsatisfactory if displayed as “T=@@ (##) [NG]” NG (@@, ## are both arbitrary numbers)	• Check for disconnection of the circuits around D101 (BD (MD) board) • Check the signals around IC101, IC151, CN102, CN103 (BD (MD) board)

Note:
The criteria for determination above is intended merely to determine if satisfactory or not, and does not serve as the specified value for adjustments.
When performing adjustments, use the specified values for adjustments.

Downloaded from www.Manualslib.com manuals search engine

CD SECTION

CD-TEXT TEST DISC

This unit is able to display the test data (character information) written in the CD on its fluorescent indicator tube.
The CD-TEXT TEST DISC (TGCS-313:4-989-366-01) is used for checking the display.
To check, perform the following procedure.

Checking Method:

1. Turn ON the power, set the disc to the disc table with the “test disc” label facing up, and chuck the disc.
2. Press the [▷] (CD) button and play back the disc.
3. The following will be displayed on the fluorescent indicator tube.
   Display : 1KHZ/0DB
4. Rotating [⏮ AMS ⏭] (CD) knob, select the track. The text data of each track will be displayed.
   For details of the displayed contents for each track, refer to “Table 1 : CD-TEXT TEST DISC TEXT Data Contents” and “Table 2 : CD-TEXT TEST DISC Recorded Contents and Display”.

Restrictions in CD-TEXT Display

In this unit, some special characters will not be displayed properly. These will be displayed as a space or a character resembling it. For details, refer to “Table 2 : CD-TEXT DISC Recorded Contents and Display”.

Table 1 : CD-TEXT TEST DISC TEXT Data Contents (TRACKS No. 1 to 41:Normal Characters)

TRACK No.	Displayed Contents	TRACK No.	Displayed Contents
1	1kHz/0dB/L&R	22	1kHz/–90dB/L&R
2	20Hz/0dB/L&R	23	Infinity Zero w/o emphasis//L&R
3	40Hz/0dB/L&R	24	Infinity Zero with emphasis//L&R
4	100Hz/0dB/L&R	25	400Hz+7kHz(4:1)/0dB/L&R
5	200Hz/0dB/L&R	26	400Hz+7kHz(4:1)/–10dB/L&R
6	500Hz/0dB/L&R	27	19kHz+20kHz(1:1)/0dB/L&R
7	1kHz/0dB/L&R	28	19kHz+20kHz(1:1)/–10dB/L&R
8	5kHz/0dB/L&R	29	100Hz/0dB/L*
9	7kHz/0dB/L&R	30	1kHz/0dB/L*
10	10kHz/0dB/L&R	31	10kHz/0dB/L*
11	16kHz/0dB/L&R	32	20kHz/0dB/L*
12	18kHz/0dB/L&R	33	100Hz/0dB/R*
13	20kHz/0dB/L&R	34	1kHz/0dB/R*
14	1kHz/0dB/L&R	35	10kHz/0dB/R*
15	1kHz/–1dB/L&R	36	20kHz/0dB/R*
16	1kHz/–3dB/L&R	37	100Hz Squer Wave//L&R
17	1kHz/–6dB/L&R	38	1kHz Squer Wave//L&R
18	1kHz/–10dB/L&R	39	1kHz w/emphasis/–0.37dB/L&R
19	1kHz/–20dB/L&R	40	5kHz w/emphasis/–4.53dB/L&R
20	1kHz/–60dB/L&R	41	16kHz w/emphasis/–9.04dB/L&R
21	1kHz/–80dB/L&R		

Note: The contents of Track No. 1 to 41 are the same as those of the current TEST DISC-their titles are displayed.

Downloaded from www.Manualslib.com manuals search engine

Table 2: CD-TEXT TEST DISC Recorded Contents and Display

(In this unit, some special characters cannot be displayed. This is not a fault)

TRACK No.	Recorded contents	Display
42	! ” # $ % & ´ (21h to 27h)1kHz 0dB L&R	← All the same
43	( ) ∗ + , – . / (28h to 2Fh)	← All the same
44	0 1 2 3 4 5 6 7 (30h to 37h)	← All the same
45	8 9 : ; < = > ? (38h to 3Fh)	← All the same
46	@A B C D E F G (40h to 47h)	← All the same
47	H I J K L M N O (48h to 4Fh)	← All the same
48	P Q R S T U V W (50h to 57h)	← All the same
49	X Y Z [¥] ^ _ (58h to 5Fh)	← All the same
50	` a b c d e f g (60h to 67h)	← All the same
51	h i j k l m n o (68h to 6Fh)	← All the same
52	p q r s t u v w (70h to 77h)	← All the same
53	x y z { l } ~ ▌ (78h to 7Fh)	← All the same
54	▌ ¡ ¢ £ ¤ ¥ ¦ § (A0h to A7h) 8859-1	(A0h to A7h) 8859-1
55	♪ © ª « ¬ ® ¯ (A8h to AFh)	(A8h to AFh)
56	° ± ² ³ ´ µ ¶ • (B0h to B7h)	(B0h to B7h)
57	† ¹ º » ¼ ½ ¾ ¿ (B8h to BFh)	(B8h to BFh)
58	À Á Â Ã Ä ÅÆ Ç (C0h to C7h)	A A A A A A C (C0h to C7h)
59	È É Ê Ë Ì Í Î Ï (C8h to CFh)	E E E E I I I I (C8h to CFh)
60	Ð Ñ Ò Ó Ô Õ Ö × (D0h to D7h)	D N O O O O O (D0h to D7h)
61	Ø Ù Ú Û Ü Ý Þ ß (D8h to DFh)	O U U U U Y (D8h to DFh)
62	à á â ã ä å æ ç (E0h to E7h)	a a a a a a c (E0h to E7h)
63	è é ê ë ì í î ï (E8h to FFh)	e e e e i i i i (E8h to EFh)
64	ð ñ ò ó ô õ ö ÷ (F0h to F7h)	d n o o o o o (F0h to F7h)
65	ø ù ú û ü ý þ ÿ (F8h to FFh)	o u u u u y y (F8h to FFh)
66	No.66	← All the same
67	No.67	← All the same
to	to	to
99	No.99	← All the same

Downloaded from www.Manualslib.com manuals search engine

SECTION 2
GENERAL

This section is extracted from instruction manual.

Main unit

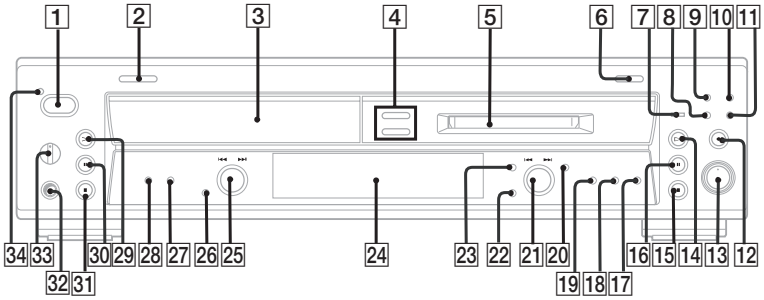

ALPHABETICAL ORDER

A – I

ALBUM 26
AMS 21 25
CD SYNCHRO NORMAL/HIGH 4
CLEAR 22
Disc tray 3
DISPLAY 19
Display window 24
EJECT 6
GROUP ON/OFF 9
GROUP SKIP 10
INPUT 11

J – Z

MD slot 5
MDLP indicator 7
MENU/NO 23
OPEN/CLOSE 2
PHONES jack 32
PHONE LEVEL 33
PLAY MODE 17 27
REC LEVEL 13
REC MODE 8
REC ● 12
STANDBY indicator 34
TIME 18 28
YES 20

BUTTON DESCRIPT

I/⏻ (power/standby) 1
▷ (play) 14 29
❚❚ (pause) 16 30
■ (stop) 15 31

Remote control

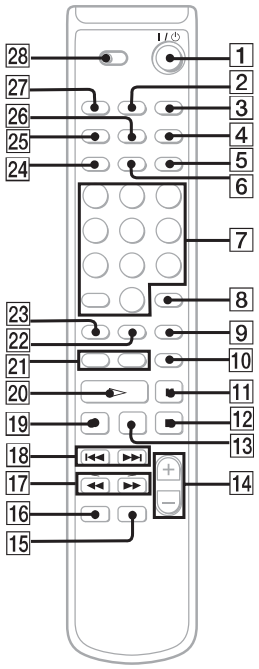

ALPHABETICAL ORDER

A – M

ALBUM/GROUP -/+ 14
CD MD select 28
CD SYNCHRO NORMAL/
HIGH 21
CLEAR 8
DISPLAY 25
FADER 22
GROUP ON/OFF 23
INPUT 27
MENU/NO 24
MUSIC SYNC 9

N – Z

NAME EDIT/SELECT 6
number buttons 7
PLAY MODE 3
REC MODE 2
REC-IT 10
REPEAT 16
SCROLL 26
SLEEP 15
T.REC 13
TIME 4
YES 5

BUTTON DESCRIPTIO

⏮ / ⏭ (skip) 18
I/⏻ (power/standby) 1
◀◀ / ▶▶ (search) 17
▷ (play) 20
❚❚ (pause) 11
■ (stop) 12
● (record) 19

Downloaded from www.Manualslib.com manuals search engine

SECTION 3
DISASSEMBLY

- This set can be disassembled in the order shown below.

3-1. DISASSEMBLY FLOW

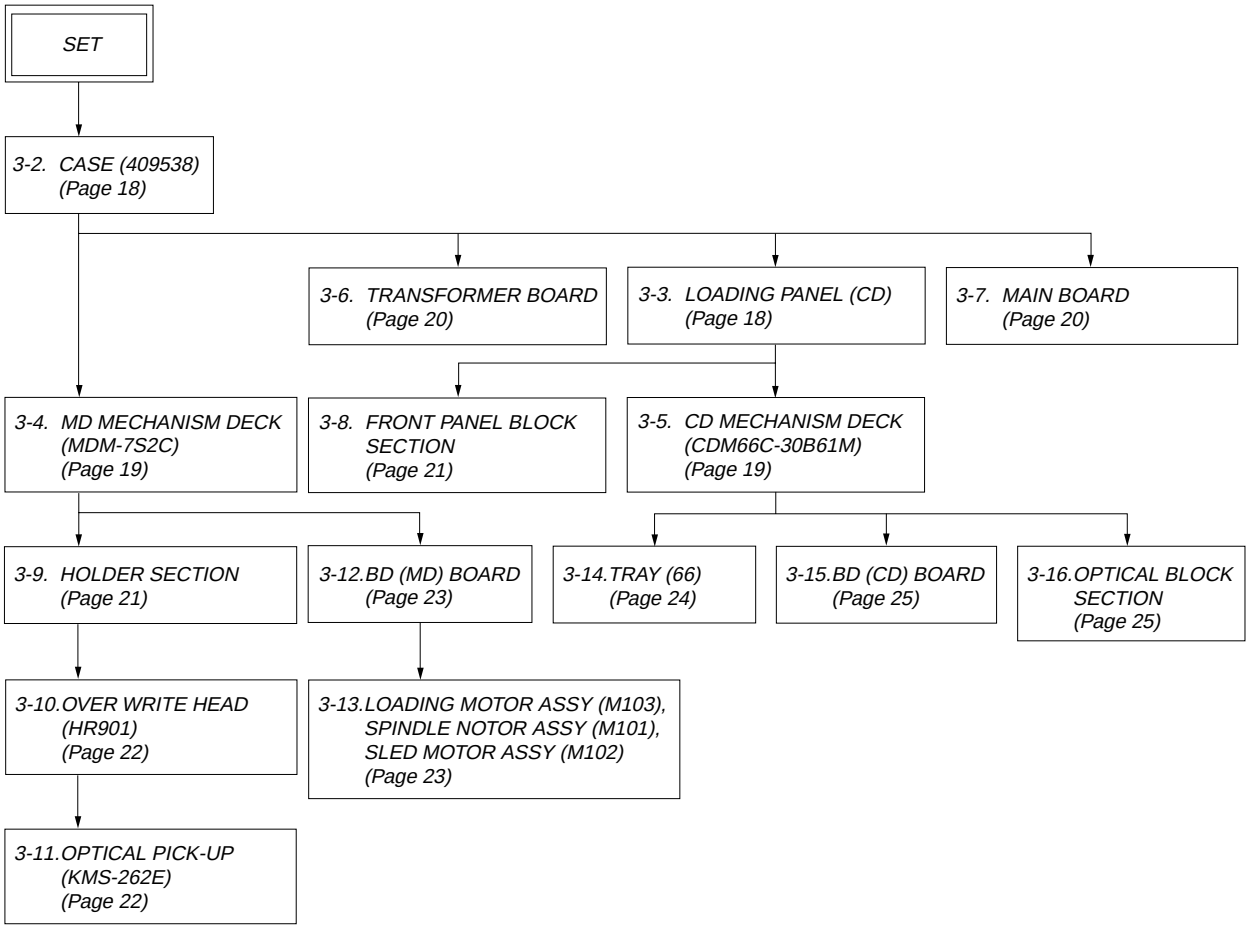

Downloaded from www.Manualslib.com manuals search engine

Note: Follow the disassembly procedure in the numerical order given.

3-2. CASE (409538)

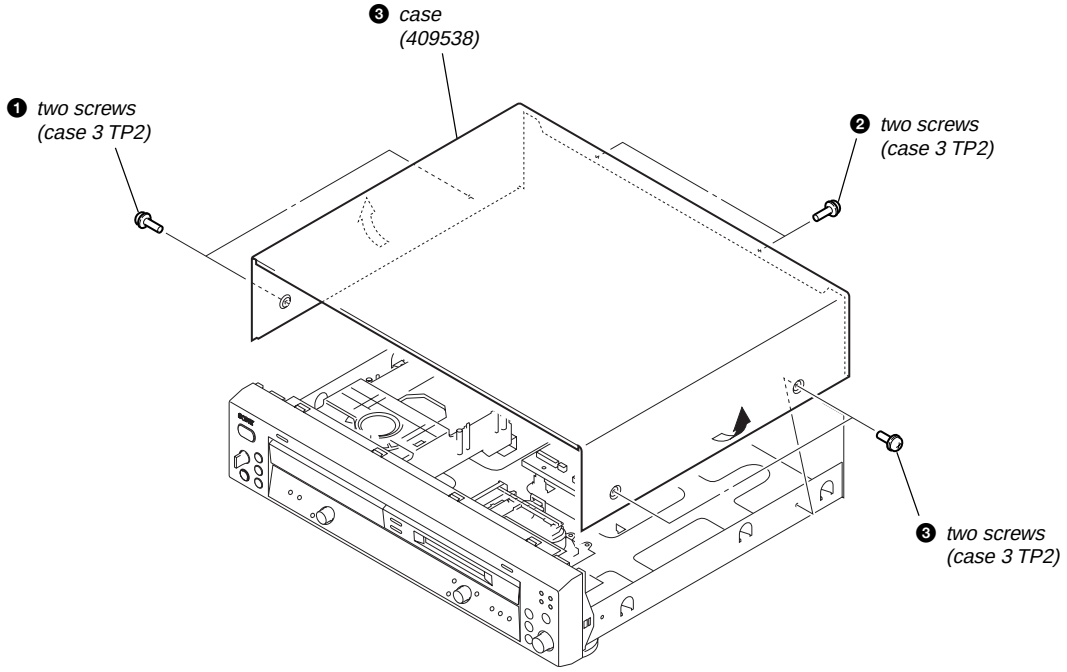

3-3. LOADING PANEL (CD)

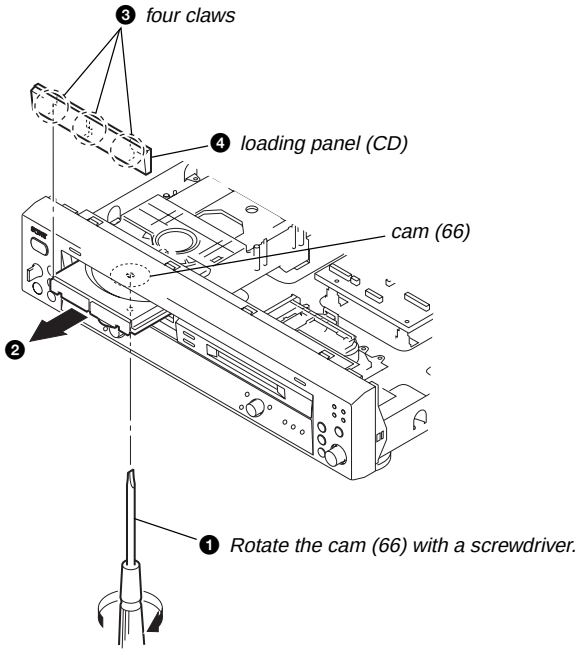

Downloaded from www.Manualslib.com manuals search engine

3-4. MD MECHANISM DECK (MDM-7S2C)

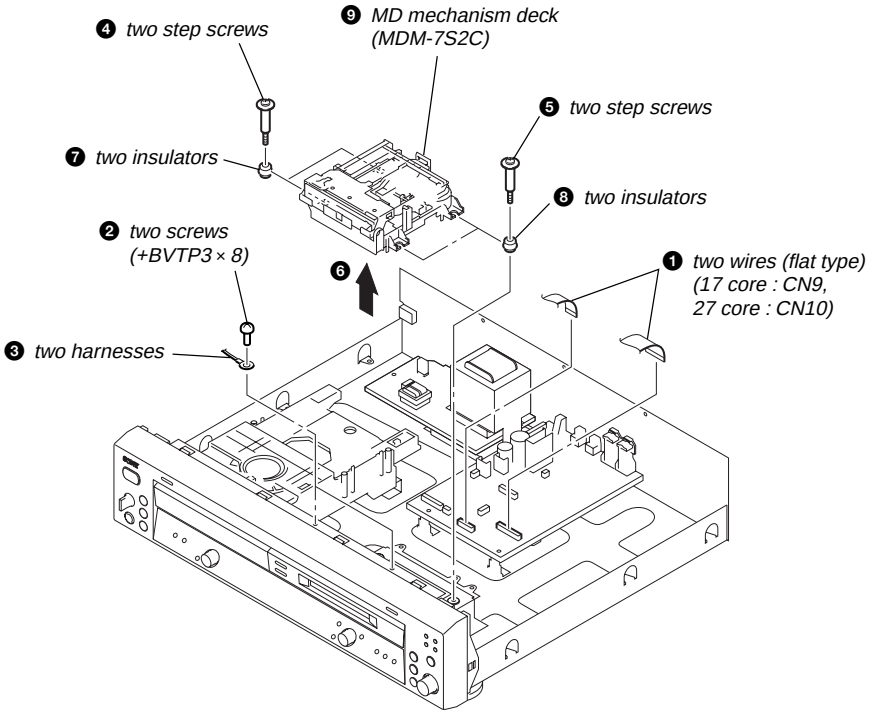

3-5. CD MECHANISM DECK (CDM66C-30B61M)

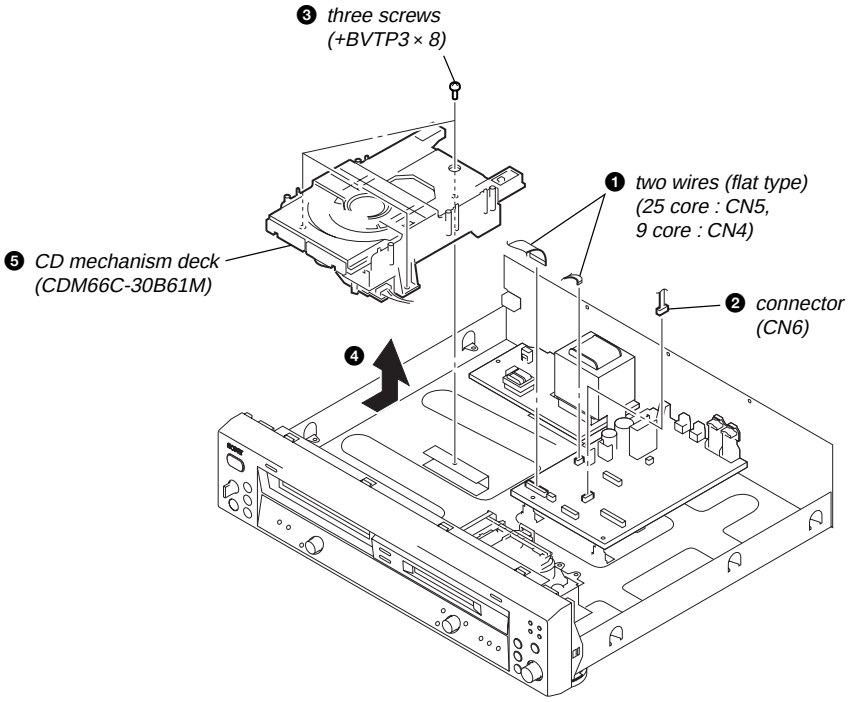

Downloaded from www.Manualslib.com manuals search engine

3-6. TRANSFORMER BOARD

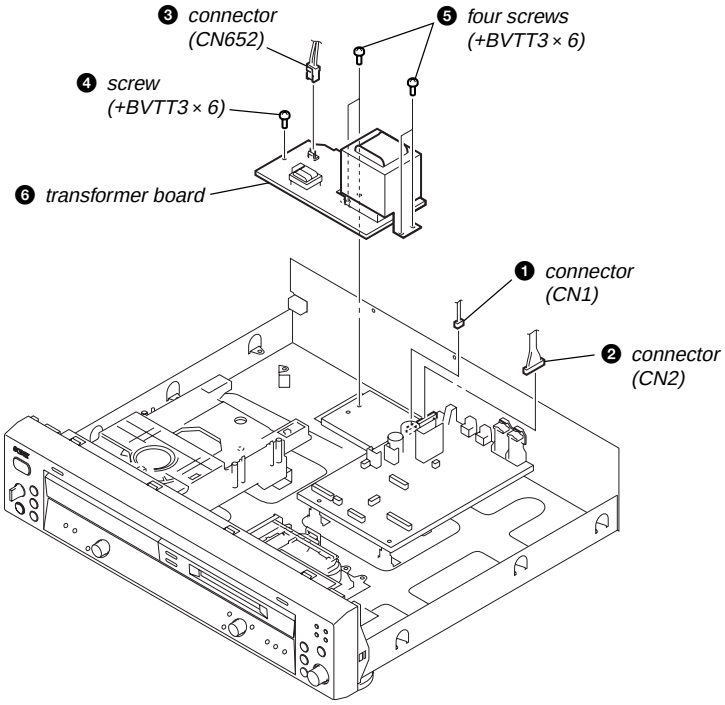

3-7. MAIN BOARD

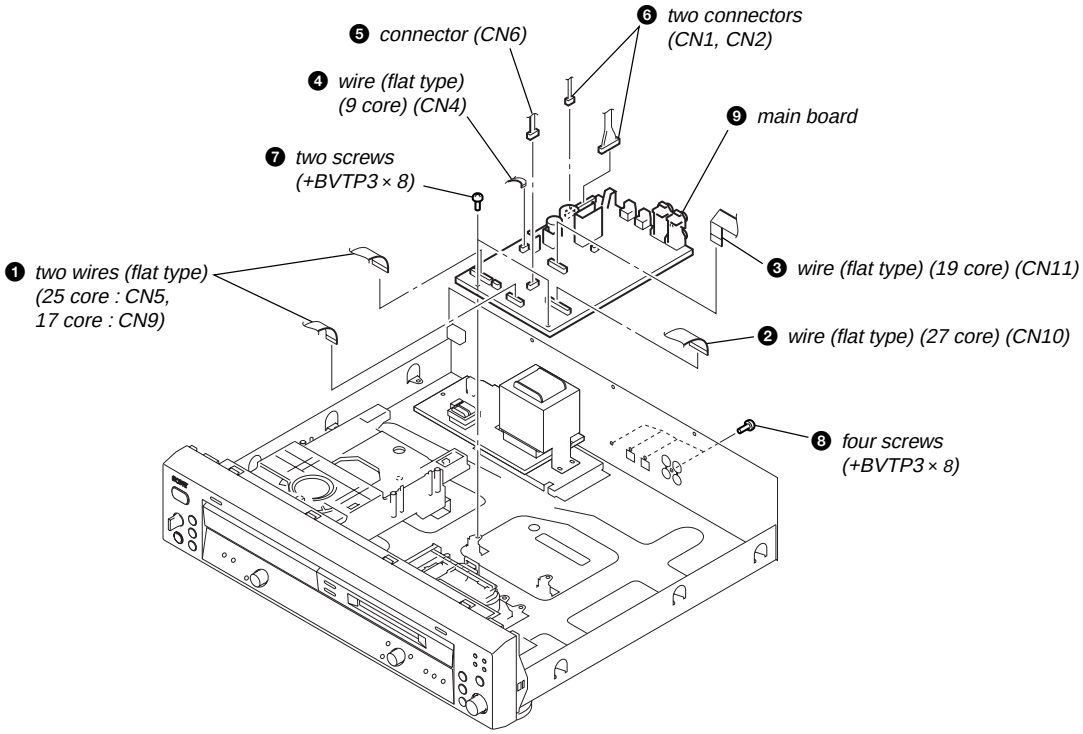

Downloaded from www.Manualslib.com manuals search engine

3-8. FRONT PANEL BLOCK SECTION

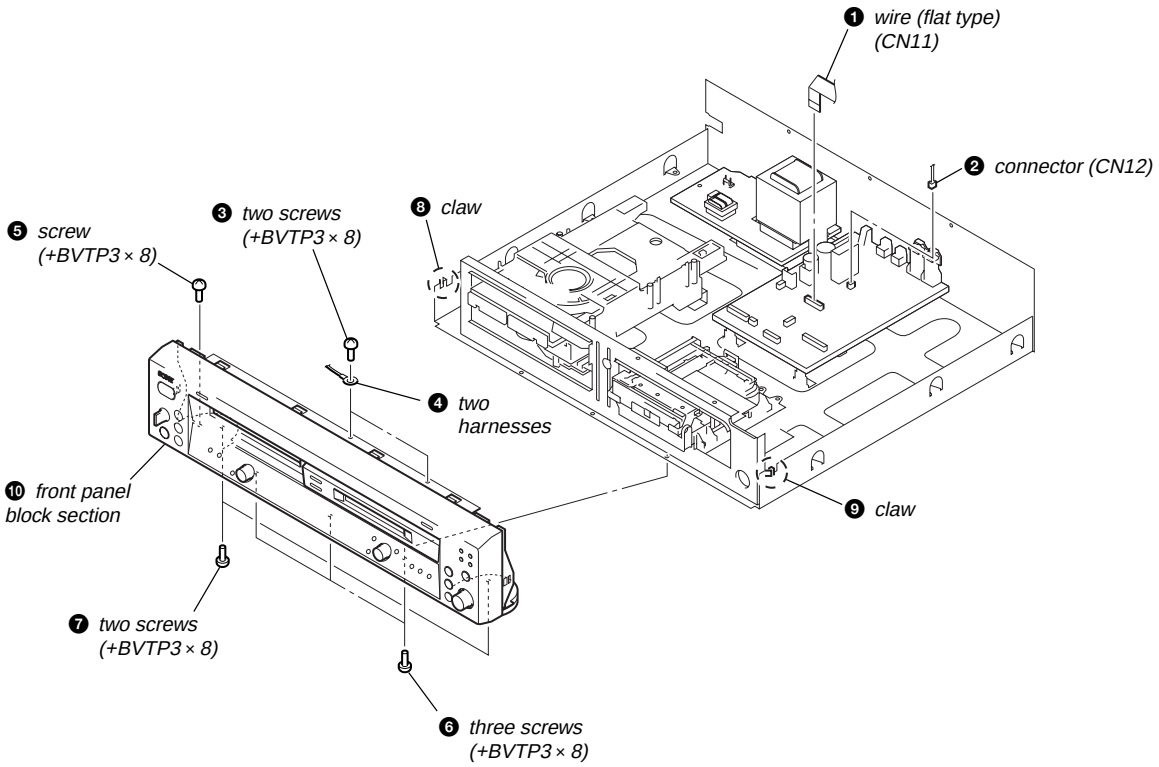

3-9. HOLDER SECTION

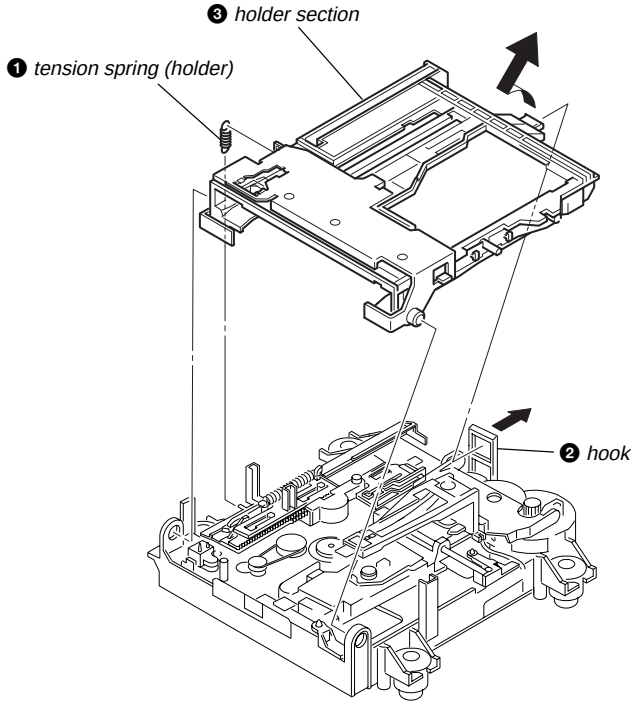

Downloaded from www.Manualslib.com manuals search engine

3-10. OVER WRITE HEAD (HR901)

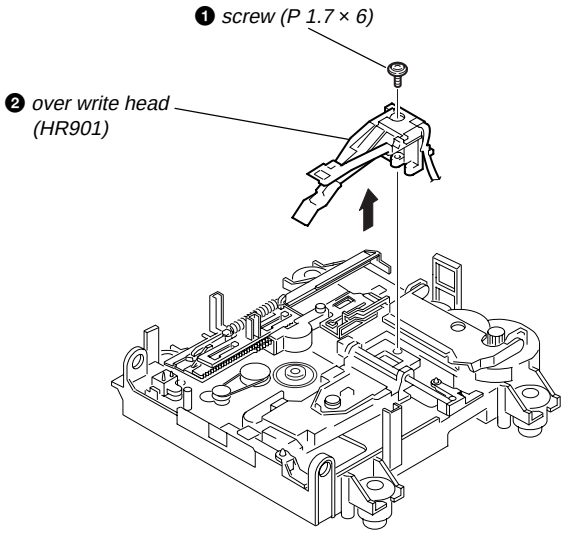

3-11. OPTICAL PICK-UP (KMS-262E)

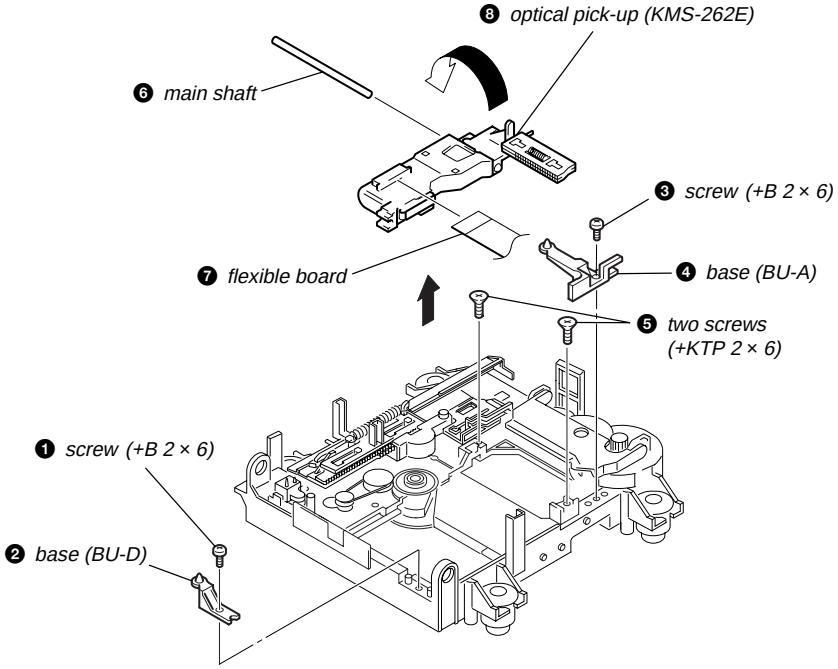

Downloaded from www.Manualslib.com manuals search engine

3-12. BD (MD) BOARD

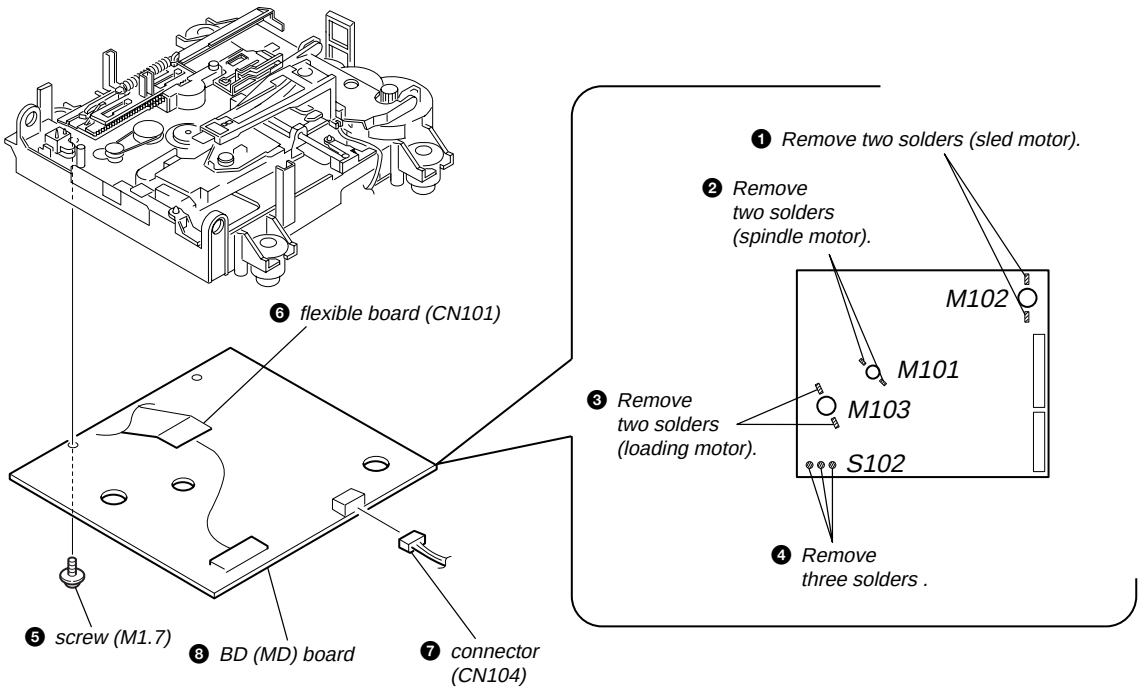

3-13. LOADING MOTOR ASSY (M103), SPINDLE MOTOR ASSY (M101), SLED MOTOR ASSY (M102)

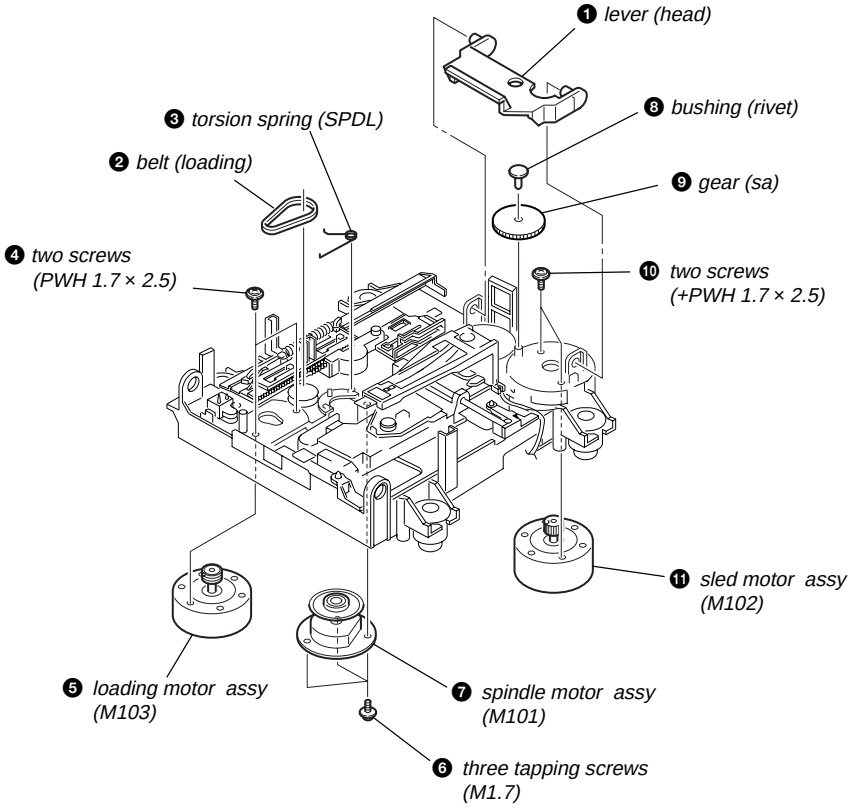

Downloaded from www.Manualslib.com manuals search engine

3-14. TRAY (66)

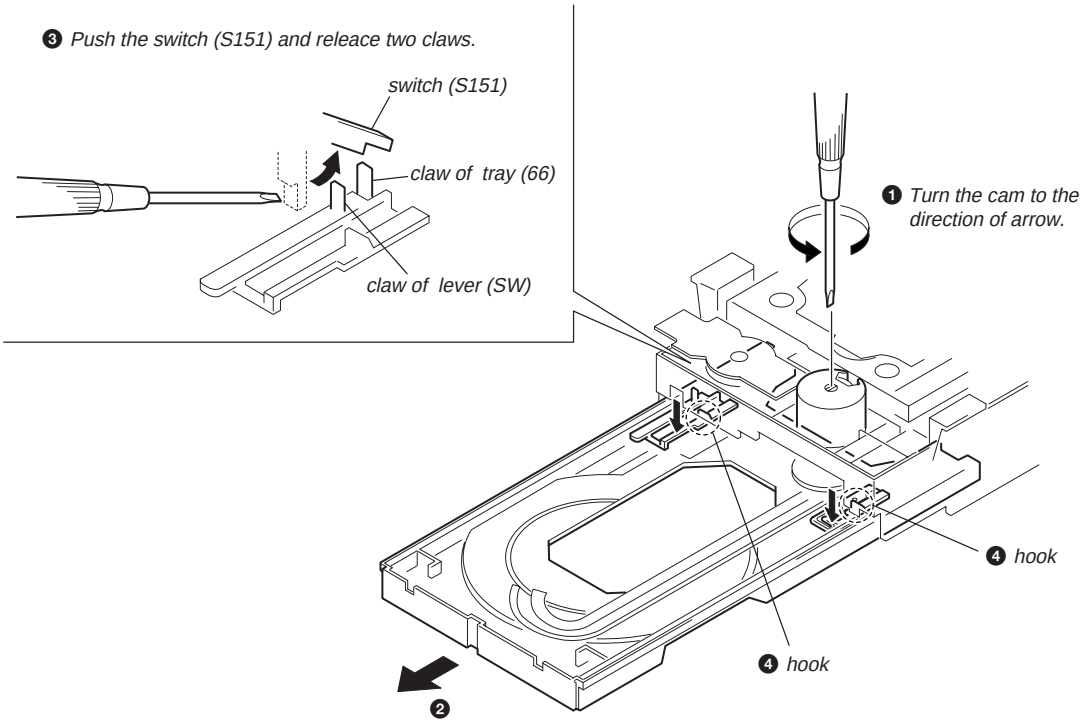

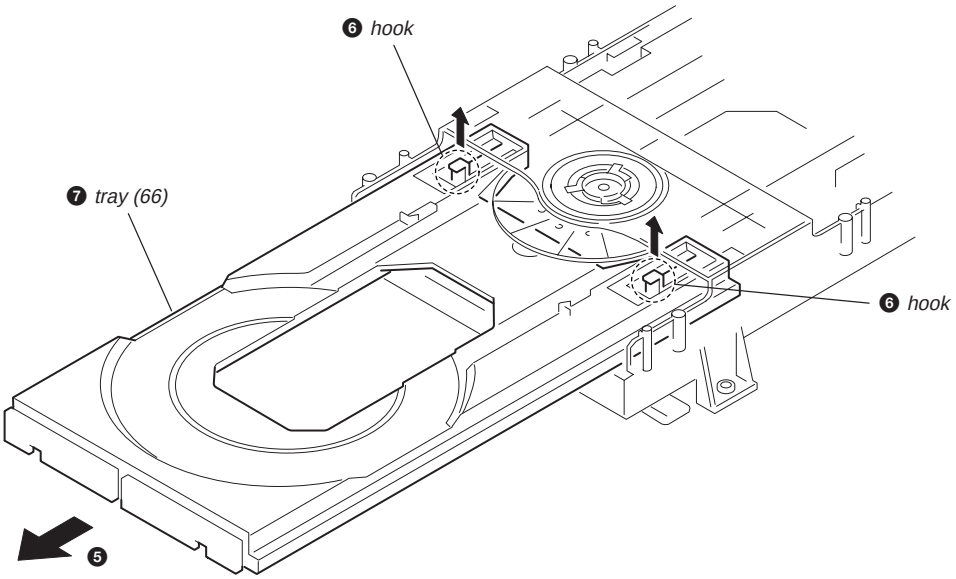

Downloaded from www.Manualslib.com manuals search engine

3-15. BD (CD) BOARD

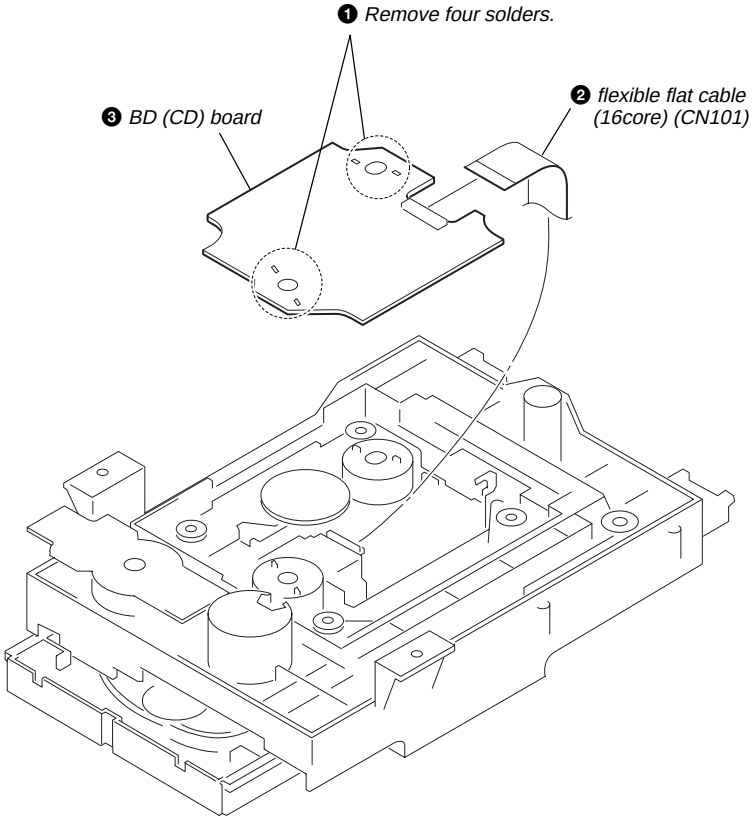

3-16. OPTICAL BLOCK SECTION

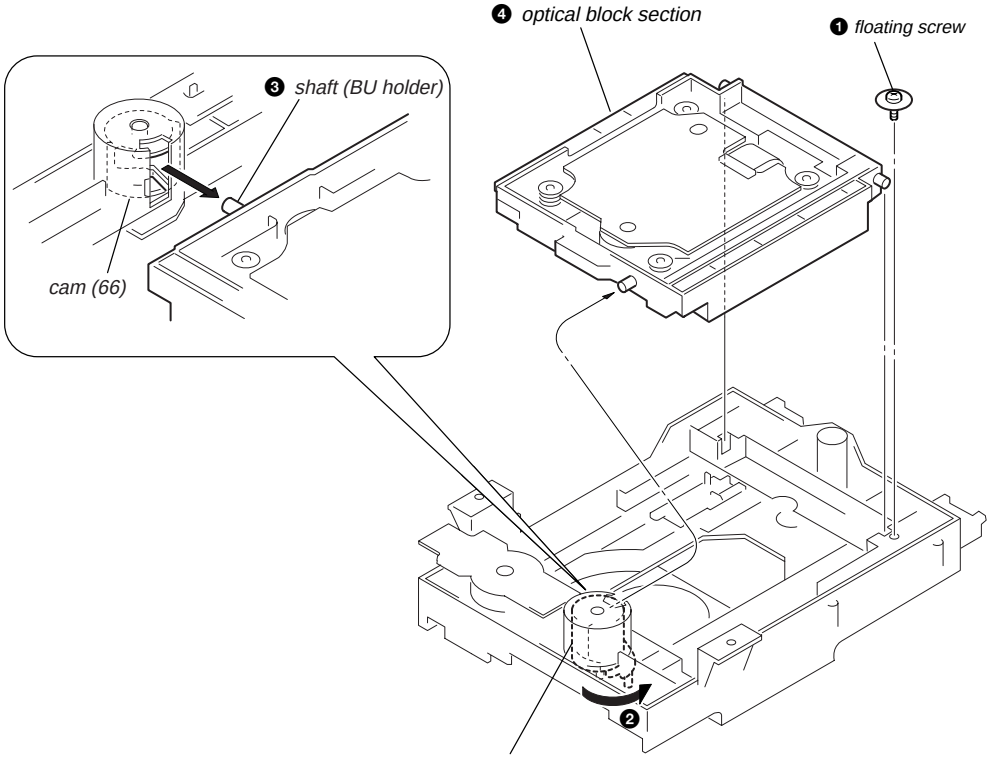

Rotate the cam (66) in the direction of ❷ to move the shaft (BU holder) upper.

Downloaded from www.Manualslib.com manuals search engine

SECTION 4
TEST MODE

Setting the Test Mode
Procedure:
1. Press the [I/⏻] button to turn the power on.
2. Press the [⏮ AMS ⏭] (CD) knob and [INPUT] button at the same time, press the [⏮ AMS ⏭] (MD) knob.
3. Turn the [⏮ AMS ⏭] (CD) knob to select the menu.
4. Press the [⏮ AMS ⏭] (CD) knob to execute the test mode.

Releasing the Test Mode
Procedure 1:
1. Press the [⏮ AMS ⏭] (CD) knob and [INPUT] button at the same time, press the [⏮ AMS ⏭] (MD) knob.
2. Press the [I/⏻] button to turn the power off.

Procedure 2:
1. Pull out the AC cord to turn the power off.

Contents of test mode

No.	Display	Function
1	SYS Version	System version display
2	BU Test	CD BU test mode
3	SERVICE	CD Service mode
4	MD Version	MD version display
5	MD Test	MD test mode*
6	Initialize	MD initialize
7	FL ALL ON	Fluorescent indicator tube test
8	FL ALL OFF	Fluorescent indicator tube test
9	FL ITIMATSU	Fluorescent indicator tube test
10	LED CHECK	LED check
11	KEY CHECK	Keyboard check
12	RM CHECK	Remote commander check
13	Play Speed	CD x4 speed

* Details of MD test mode is described on and after page 28.

System Version Display
Procedure:
1. Enter the test mode, then turn the [⏮ AMS ⏭] (CD) knob to display “SYS Version”, and press the [⏮ AMS ⏭] (CD) knob.
2. The system version is displayed.
3. To exit from this mode, turn the [⏮ AMS ⏭] (CD) knob.
4. Press the [I/⏻] button to turn the power off.

CD Test Mode
Procedure:
1. Enter the test mode, then turn the [⏮ AMS ⏭] (CD) knob to display “BU Test”, and press the [⏮ AMS ⏭] (CD) knob.
2. “bdt S CURVE” is displayed. This test mode is used in the Electrical Adjustment section.
3. Turn the [⏮ AMS ⏭] (CD) knob. “bdt RAM REA”, “bdt RAM WRI”, “bdt COMOUT”, “bdt FB TUNE”, and “bdt ERR RATE” are displayed.
4. To exit from this mode, press the [MENU/NO] button and turn the [⏮ AMS ⏭] (CD) knob to display “bdt ERR RATE”.
5. Press the [⏮ AMS ⏭] (CD) knob and [INPUT] button at the same time, press the [⏮ AMS ⏭] (MD) knob.
6. Press the [I/⏻] button to turn the power off.

CD service Mode
Procedure:
1. Enter the test mode, then turn the [⏮ AMS ⏭] (CD) knob to display “SERVICE”, and press the [⏮ AMS ⏭] (CD) knob.
2. “SERVICE MOD” is displayed.
3. Press the [SKIP] button, the “SLED OUT” is displayed and the sled moves to the outermost position.
4. Press the [GROUP ON/OFF] button, the “SLED IN” is displayed and the sled moves to the innermost position.
5. Press the [REC] button, the “TRV ON” is displayed.
6. Press the [⏮ AMS ⏭] (CD) knob, then “SERVICE MOD” is displayed again.
7. To exit from this mode, press the [⏮ AMS ⏭] (CD) knob and [INPUT] button at the same time, press the [⏮ AMS ⏭] (MD) knob.
8. Press the [I/⏻] button to turn the power off.

Note: Always move the pick-up to the most inside position when exiting from this mode.

MD Version Display
Procedure:
1. Enter the test mode, then turn the [⏮ AMS ⏭] (CD) knob to display “MD Version”, and press the [⏮ AMS ⏭] (CD) knob.

Downloaded from www.Manualslib.com manuals search engine

2. The MD version is displayed.
3. To exit from this mode, turn the [⏮ AMS ⏭] (CD) knob.
4. Press the [I/⏻] button to turn the power off.

Initialize
Procedure:
1. Enter the test mode, then turn the [⏮ AMS ⏭] (CD) knob to display “Initialize”, and press the [⏮ AMS ⏭] (CD) knob.
2. MD is Initialised.
3. To exit from this mode, press the [⏮ AMS ⏭] (CD) knob and [INPUT] button at the same time, press the [⏮ AMS ⏭] (MD) knob.
4. Press the [I/⏻] button to turn the power off.

FL ALL ON Mode
Procedure:
1. Enter the test mode, then turn the [⏮ AMS ⏭] (CD) knob to display “FL ALL ON”, and press the [⏮ AMS ⏭] (CD) knob.
2. All segments of fluorescent indicator tube turn on.
3. To exit from this mode, press the [MENU/NO] button, then “FL ALL ON” is displayed again.
4. Press the [I/⏻] button to turn the power off.

FL ALL OFF Mode
Procedure:
1. Enter the test mode, then turn the [⏮ AMS ⏭] (CD) knob to display “FL ALL OFF”, and press the [⏮ AMS ⏭] (CD) knob.
2. All segments of fluorescent indicator tube turn off.
3. To exit from this mode, press the [MENU/NO] button, then “FL ALL OFF” is displayed again.
4. Press the [I/⏻] button to turn the power off.

FL ITIMATSU Mode
Procedure:
1. Enter the test mode, then turn the [⏮ AMS ⏭] (CD) knob to display “FL ITIMATSU”, and press the [⏮ AMS ⏭] (CD) knob.
2. Checkered patterns of segments are displayed.
3. To exit from this mode, press the [MENU/NO] button, then “FL ITIMATSU” is displayed again.
4. Press the [I/⏻] button to turn the power off.

LED Check Mode
Procedure:
1. Enter the test mode, then turn the [⏮ AMS ⏭] (CD) knob to display “LED CHECK”, and press the [⏮ AMS ⏭] (CD) knob.
2. Turn the [⏮ AMS ⏭] (CD) knob, the LED on front panel will repeat lighting on and off.
3. To exit from this mode, press the [MENU/NO] button, then “LED CHECK” is displayed again.
4. Press the [I/⏻] button to turn the power off.

KEY Check Mode
Procedure:
1. Enter the test mode, then turn the [⏮ AMS ⏭] (CD) knob to display “KEY CHECK”, and press the [⏮ AMS ⏭] (CD) knob.
2. “Got 1 keys” is displayed.
3. Press the buttons and knobs, and when all the buttons and knobs are pressed, “Got 27 keys” will be displayed.
4. To exit from this mode, press the [⏮ AMS ⏭] (CD) knob and [INPUT] button at the same time, press the [⏮ AMS ⏭] (MD) knob.
5. Press the [I/⏻] button to turn the power off.

Remote Commander Check
Procedure:
1. Enter the test mode, then turn the [⏮ AMS ⏭] (CD) knob to display “RM CHECK”, and press the [⏮ AMS ⏭] (CD) knob.
2. Press the [▷] key on the remote commander, then “Got PlayCom” is displayed.
3. To exit from this mode, press the [MENU/NO] button, then “RM CHECK” is displayed again.
4. Press the [I/⏻] button to turn the power off.

CD Play Speed Selection Mode
Procedure:
1. Enter the test mode, then turn the [⏮ AMS ⏭] (CD) knob to display “Play Speed”, and press the [⏮ AMS ⏭] (CD) knob.
2. “x4 Play” is displayed. If a CD is in the deck, pressing the [▷] (CD) button executes the 4 times speed playback.
3. Press the [■] button to stop the playback.
4. To exit from this mode, press the [MENU/NO] button, then “Play Speed” is displayed again.
5. Press the [I/⏻] button to turn the power off.

Downloaded from www.Manualslib.com manuals search engine

MD SECTION

1. PRECAUTIONS FOR USE OF TEST MODE

- As loading related operations will be performed regardless of the test mode operations being performed, be sure to check that the disc is stopped before setting and removing it.
  Even if the EJECT button is pressed while the disc is rotating during continuous playback, continuous recording, etc., the disc will not stop rotating.
  Therefore, it will be ejected while rotating.
  Be sure to press the EJECT button after pressing the MENU/NO button and the rotation of disc is stopped.

1-1. Recording laser emission mode and operating buttons

- Continuous recording mode (CREC 2MODE) (C37)
- Laser power check mode (LDPWR CHECK) (C13)
- Laser power adjustment mode (LDPWR ADJUST) (C04)
- Comparison with initial Iop value written in nonvolatile memory (Iop Compare) (C27)
- Write current Iop value read in nonvolatile memory using microprocessor (Iop NV Save) (C06)
- Traverse (MO) check (EF MO CHECK) (C14)
- Traverse (MO) adjustment (EF MO ADJUST) (C07)
- When pressing the REC ● button.

2. SETTING THE TEST MODE

1. Press the I/⏻ button to turn the power on.
2. Press the ⏮ AMS ⏭ (CD) knob and INPUT button at the same time, press the ⏮ AMS ⏭ (MD) knob to display “SYS version”.
3. Turn the ⏮ AMS ⏭ (CD) knob and when “MD Test” is displayed, press the ⏮ AMS ⏭ (MD) knob.

When the test mode is set, “[Check]” will be displayed. Turn the ⏮ AMS ⏭ (MD) knob switches between the following three groups; ··· ⟷ [Check] ⟷ [Service] ⟷ [Develop] ⟷ ···.

Note: Do not use the test mode in the [Develop] group.
If used, the unit may not operate normally.
If the [Develop] group is set accidentally, press the MENU/NO button immediately to exit the [Develop] group.

3. RELEASING THE TEST MODE

Procedure 1:
Press the ⏮ AMS ⏭ (CD) knob and INPUT button at the same time, press the ⏮ AMS ⏭ (MD) knob, press the I/⏻ button to turn the power off.
Procedure 2:
Pull out the AC cord to return the power off.

4. BASIC OPERATIONS OF THE TEST MODE

All operations are performed using the ⏮ AMS ⏭ (MD) knob, YES button, and MENU/NO button.
The functions of these buttons are as follows.

Function name	Function
⏮ AMS ⏭ (MD) knob (turn)	Select.
⏮ AMS ⏭ (MD) knob (push)	Set Sub menu.
YES button	Proceeds onto the next step. Finalizes input.
MENU/NO button	Returns to previous step. Stops operations.

Downloaded from www.Manualslib.com manuals search engine

5. SELECTING THE TEST MODE

There are 26 types of test modes as shown below. The groups can be switched by turning the [⏮ AMS ⏭] (MD) knob. After selecting the group to be used, press the [YES] button. After setting a certain group, turn the [⏮ AMS ⏭] (MD) knob switches between these modes.
Refer to "Group" in the table for details can be selected.
All items used for servicing can be treated using group [Service]. So be carefully not to enter other groups by mistake.

Note: Do not use the test mode in the [Develop] group.
If used, the unit may not operate normally.
If the [Develop] group is set accidentally, press the [MENU/NO] button immediately to exit the [Develop] group.

Display	No.	Details	Mark	Group	
				Check	Service
AUTO CHECK	C01	Automatic self-diagnosis			○
Err Display	C02	Error history display, clear			○
TEMP ADJUS	C03	Temperature compensation offset adjustment			○
LDPWR ADJUS	C04	Laser power adjustment			○
Iop Write	C05	Iop data writing			○
Iop NV Save	C06	Writes current Iop value in read nonvolatile memory using microprocessor			○
EF MO ADJUS	C07	Traverse (MO) adjustment			○
EF CD ADJUS	C08	Traverse (CD) adjustment			○
FBIAS ADJUS	C09	Focus bias adjustment			○
AG Set (MO)	C10	Auto gain output level adjustment (MO)			○
AG Set (CD)	C11	Auto gain output level adjustment (CD)			○
TEMP CHECK	C12	Temperature compensation offset check		○	○
LDPWR CHECK	C13	Laser power check		○	○
EF MO CHECK	C14	Traverse (MO) check		○	○
EF CD CHECK	C15	Traverse (CD) check		○	○
FBIAS CHECK	C16	Focus bias check		○	○
ScurveCHECK	C17	S-curve check	×	○	
VERIFYMODE	C18	Nonvolatile memory check	×	○	
DETRK CHECK	C19	Detrack check	×	○	
0920 CHECK	C25	Most circumference check	×	○	
Iop Read	C26	Iop data display		○	○
Iop Compare	C27	Comparison with initial Iop value written in nonvolatile memory		○	○
ADJ CLEAR	C28	Initialization of nonvolatile memory for adjustment values			○
INFORMATION	C31	Display of microprocessor version, etc.		○	○
CPLAY 2MODE	C36	Continuous playback mode		○	○
CREC 2MODE	C37	Continuous recording mode		○	○

- For details of each adjustment mode, refer to "SECTION 5. Electrical Adjustments".
  For details of "Err Display" (C02), refer to "Self-Diagnosis Function" on page 2.
- If a different mode has been selected by mistake, press the [MENU/NO] button to release that mode.
- Modes with (×) in the Mark column are not used for servicing and therefore are not described in detail. If these modes are set accidentally, press the [MENU/NO] button to release the mode immediately.

Downloaded from www.Manualslib.com manuals search engine

5-1. Operating the Continuous Playback Mode

1. Entering the continuous playback mode
(1) Set the disc in the unit. (Whichever recordable discs or discs for playback only are available)
(2) Turn the [⏮ AMS ⏭] (MD) knob and display "CPLAY 2MODE" (C36).
(3) Press the [YES] button to change the display to "CPLAY 2MID".
(4) When access completes, the display changes to "C = ▯▯▯▯ AD = ▯▯".
Note: The numbers "▯" displayed show you error rates and ADER.
2. Changing the parts to be played back
(1) Press the [YES] button during continuous playback to change the display as below.

"CPLAY 2MID" → "CPLAY 2OUT" → "CPLA Y2IN"

When pressed another time, the parts to be played back can be moved.
(2) When access completes, the display changes to "C = ▯▯▯▯ AD = ▯▯".
Note: The numbers "▯" displayed show you error rates and ADER.
3. Ending the continuous playback mode
(1) Press the [MENU/NO] button. The display will change to "CPLAY 2MODE" (C36).
(2) Press the [EJECT] button and take out the disc.
Note: The playback start addresses for IN, MID, and OUT are as follows.
IN 40h cluster
MID 300h cluster
OUT 700h cluster

5-2. Operating the Continuous Recording Mode (Use only when performing self-recording/palyback check)

1. Entering the continuous recording mode
(1) Set a recordable disc in the unit.
(2) Turn the [⏮ AMS ⏭] (MD) knob and display "CREC 2MODE" (C37).
(3) Press the [YES] button to change the display to "CREC 2MID".
(4) When access completes, the display changes to "CREC 1 (▯▯▯▯" and "REC" lights up.
Note: The numbers "▯" displayed shows you the recording position addresses.
2. Changing the parts to be recorded
(1) When the [YES] button is pressed during continuous recording, the display changes as below.

"CREC 2MID" → "CREC 2OUT" → "CREC 2IN"

When pressed another time, the parts to be recorded can be changed. "REC" goes off.
(2) When access completes, the display changes to "CREC 2 (▯▯▯▯" and "REC" lights up.
Note: The numbers "▯" displayed shows you the recording position addresses.
3. Ending the continuous recording mode
(1) Press the [MENU/NO] button. The display changes to "CREC 2MODE" (C37) and "REC" goes off.
(2) Press the [EJECT] button and take out the disc.
Note 1: The recording start addresses for IN, MID, and OUT are as follows.
IN 40h cluster
MID 300h cluster
OUT 700h cluster
Note 2: The [MENU/NO] button can be used to stop recording anytime.
Note 3: Do not perform continuous recording for long periods of time above 5 minutes.
Note 4: During continuous recording, be careful not to apply vibration.

6. FUNCTIONS OF OTHER BUTTONS

Function	Contents
▷ (MD)	Sets continuous playback when pressed in the STOP state. When pressed during continuous playback, the tracking servo turns ON/OFF.
■ (MD)	Stops continuous playback and continuous recording.
REC MODE	Switches between the pit and groove modes when pressed.
PLAY MODE (MD)	Switches the spindle servo mode (CLV S ⟷ CLV A).
DISPLAY	Switches the displayed contents each time the button is pressed
EJECT	Ejects the disc
REC ●	Starts recording from the present position while servo is turning on.

Downloaded from www.Manualslib.com manuals search engine

7. AUTOMATIC SELF-DIAGNOSIS FUNCTION

This test mode performs CREC and CPLAY automatically for mainly checking the characteristics of the optical pick-up.
To perform this test mode, the laser power must first be checked.
Perform AUTO CHECK after the laser power check and Iop check.

Procedure:

1. Display “AUTO CHECK” and press the YES button. If “LDPWR ミチェック” is displayed, it means that the laser power check has not been performed. In this case, perform the laser power check (C13) and Iop Compare (C27), and then repeat from step 1.
2. If a disc is in the mechanical deck, it will be ejected forcibly.
   “DISC IN” will be displayed in this case. Load a test disc (MDW-74/GA-1) which can be recorded.
3. If a disk is loaded at step 2, the check will start automatically.
4. When “XX CHECK” is displayed, the item corresponding to XX will be performed.
   When “06 CHECK” completes, the disc loaded at step 2 will be ejected. “DISC IN” will be displayed. Load the check disc (MD) TDYS-1.
5. When the disc is loaded in step 4, the check will automatically be resumed from “07 CHECK”.
6. After completing to test item 12, check OK or NG will be displayed. If all items are OK, “CHK ALL OK” will be displayed. If any item is NG, it will be displayed as “NG:xxxx”.

When “CHK ALL OK” is displayed, it means that the optical pick-up is normal. Check the operations of the other spindle motor, sled motor, etc.
When displayed as “NG:xxxx”, it means that the optical pick-up is faulty. In this case, replace the optical pick-up.

Downloaded from www.Manualslib.com manuals search engine

SECTION 5
ELECTRICAL ADJUSTMENTS

MD SECTION

Note: Incorrect operations may be performed if the MD test mode is not entered properly.
In this case, pull out the AC cord to turn the power off, and retry to enter the MD test mode.

5-1. PARTS REPLACEMENT AND ADJUSTMENT

If malfunctions caused by Optical pick-up such as sound skipping are suspected, follow the following check.

Check before replacement

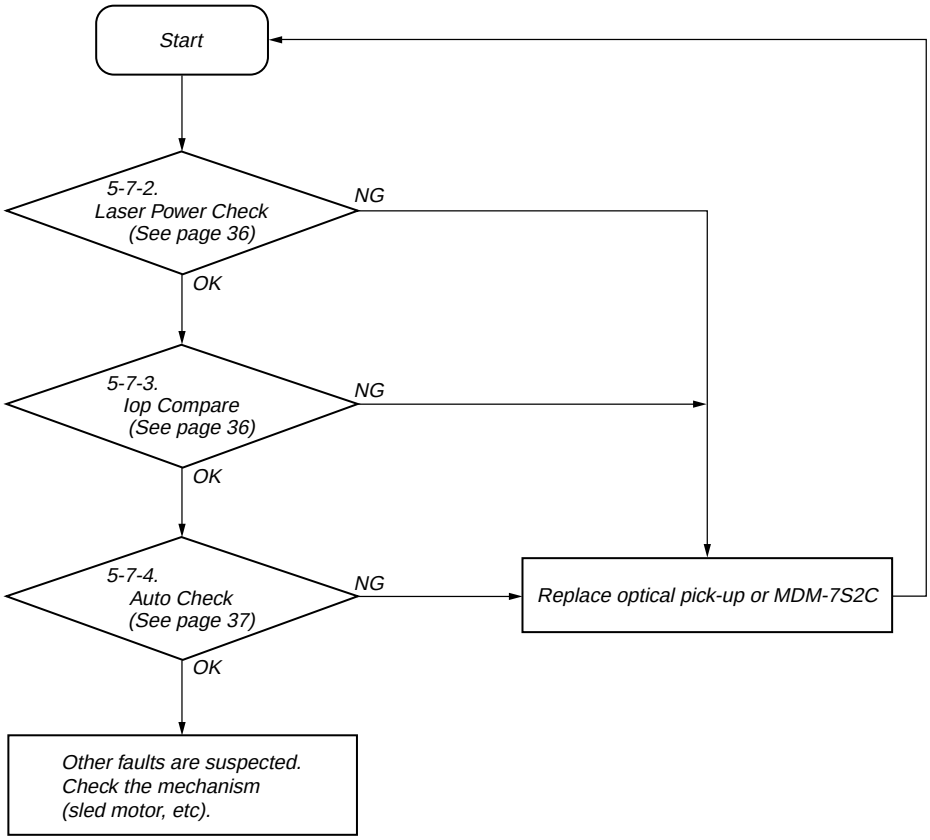

Downloaded from www.Manualslib.com manuals search engine

Adjustment flow

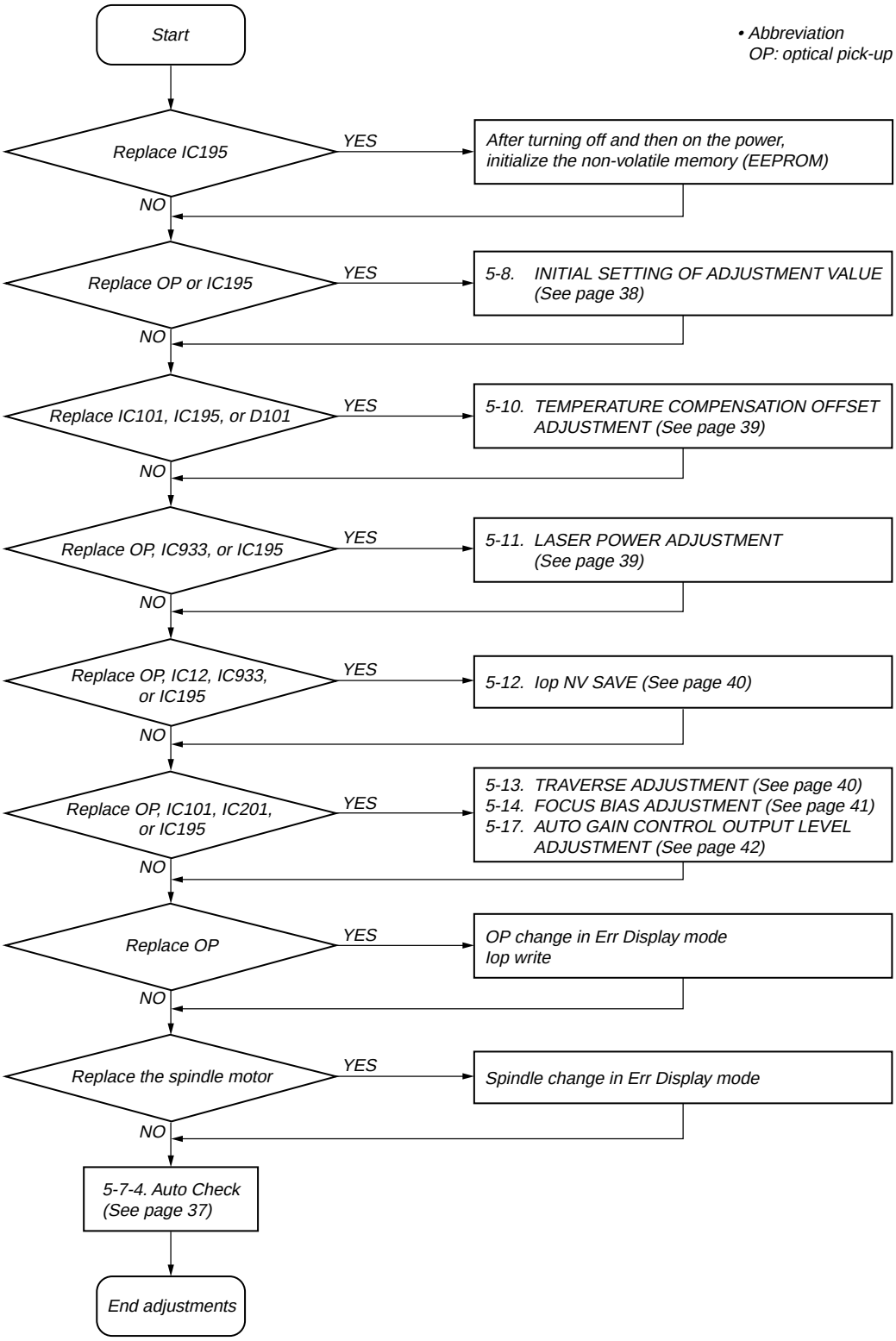

Downloaded from www.Manualslib.com manuals search engine

5-2. PRECAUTIONS FOR CHECKING LASER DIODE EMISSION

To check the emission of the laser diode during adjustments, never view directly from the top as this may lose your eye-sight.

5-3. PRECAUTIONS FOR USE OF OPTICAL PICK-UP (KMS-262A/262E)

As the laser diode in the optical pick-up is easily damaged by static electricity, solder the laser tap of the flexible board when using it. Before disconnecting the connector, desolder first. Before connecting the connector, be careful not to remove the solder. Also take adequate measures to prevent damage by static electricity. Handle the flexible board with care as it breaks easily.

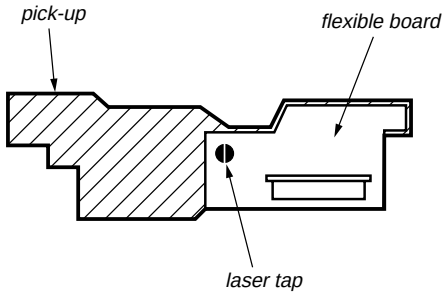

Optical pick-up flexible board

5-4. HOW TO IDENTIFY OPTICAL PICK-UP KMS-262A/KMS-262E

This set uses optical pick-up KMS-262E in the production, but for the repair, only the KMS-262A is supplied. As a result, two types of optical pick-ups are used for this set, and the specified values for the check and adjustment of the laser power vary depending on the type. Therefore, in performing the check and adjustment of the laser power, first make sure the type of optical pick-up. The type of optical pick-up can be identified as follows.

– KMS-262A –

[Top view] *[Side view]*

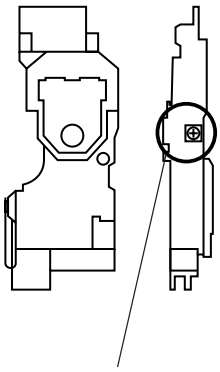

TYPE2 VR (small)

– KMS-262E –

[Top view] *[Side view]*

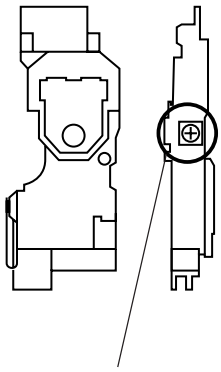

TYPE3 VR (large)

Downloaded from www.Manualslib.com manuals search engine

5-5. PRECAUTIONS FOR ADJUSTMENTS

1. When replacing the following parts, perform the adjustments and checks with ◯ in the order shown in the following table.
2. Set the test mode when performing adjustments.
   After completing the adjustments, exit the test mode.
   Perform the adjustments and checks in “group Service” of the test mode.
3. Perform the adjustments to be needed in the order shown.
4. Use the following tools and measuring devices.
   - Check Disc (MD) (TDYS-1) (Parts No. 4-963-646-01)
   - Test Disk (MDW-74/GA-1) (Parts No. 4-229-747-01)
   - Laser power meter LPM-8001 (Parts No. J-2501-046-A)
     or
     MD Laser power meter 8010S (Parts No. J-2501-145-A)*1
   - Oscilloscope (Measure after performing CAL of prove.)
   - Digital voltmeter
   - Thermometer
   - Jig for checking BD (MD) board waveform
     (Parts No. : J-2501-196-A)
5. When observing several signals on the oscilloscope, etc., make sure that VC and ground do not connect inside the oscilloscope.
   (VC and ground will become short-circuited.)
6. Using the above jig enables the waveform to be checked without the need to solder.
   (Refer to Servicing Note on page 7.)
7. As the disc used will affect the adjustment results, make sure that no dusts nor fingerprints are attached to it.

*1 **Laser power meter**

When performing laser power checks and adjustment (electrical adjustment), use of the new MD laser power meter 8010S (Part No. J-2501-145-A) instead of the conventional laser power meter is convenient.
It sharply reduces the time and trouble to set the laser power meter sensor onto the objective lens of optical pick-up.

Adjustment	Parts to be replaced						
	Optical Pick-up	IC101	IC12	IC201	IC933	IC195	D101
5-8. Initial setting of adjustment value	◯	×	×	×	×	◯	×
5-9. Recording of Iop information	◯	×	×	×	×	◯	×
5-10. Temperature compensation offset adjustment	×	◯	×	×	×	◯	◯
5-11. Laser power adjustment	◯	×	×	×	◯	◯	×
5-12. Iop NV Save	◯	×	◯	×	◯	◯	×
5-13. Traverse adjustment	◯	◯	×	◯	×	◯	×
5-14. Focus bias adjustment	◯	◯	×	◯	×	◯	×
5-17. Auto gain adjustment	◯	◯	×	◯	×	◯	×
5-7-4. AUTO CHECK	◯	◯	×	◯	◯	◯	×

Downloaded from www.Manualslib.com manuals search engine

5-6. USING THE CONTINUOUSLY RECORDED DISC

* This disc is used in focus bias adjustment and error rate check. The following describes how to create a continuous recording disc.

1. Insert a disc (blank disc) commercially available.
2. Rotate the [⏮ AMS ⏭] (MD) knob and display "CREC 2MODE" (C37).
3. Press the [YES] button again to display "CREC 2MID". Display "CREC 2(0300)" and start to recording.
4. Complete recording within 5 minutes.
5. Press the [MENU/NO] button and stop recording .
6. Press the [EJECT] button and remove the disc.

The above has been how to create a continuous recorded data for the focus bias adjustment and error rate check.

Note: Be careful not to apply vibration during continuous recording.

5-7. CHECKS PRIOR TO REPAIRS

These checks are performed before replacing parts according to "approximate specifications" to determine the faulty locations. For details, refer to "Checks Prior to Parts Replacement and Adjustments" (see page 13).

5-7-1. Temperature Compensation Offset Check

When performing adjustments, set the internal temperature and room temperature to 22 to 28ºC.

Checking Procedure:

1. Rotate the [⏮ AMS ⏭] (MD) knob to display "TEMP CHECK" (C12).
2. Press the [YES] button.
3. "T=@@(##) [OK" should be displayed. If "T=@@ (##) [NG]" is displayed, it means that the results are bad.
   (@@ indicates the current value set, and ## indicates the value written in the non-volatile memory.)

5-7-2. Laser Power Check

Before checking, check the Iop value of the optical pick-up. (Refer to 5-9. Recording and Displaying the Iop Information (see page 39.)

Connection:

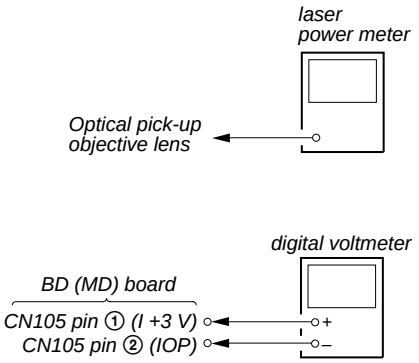

Checking Procedure:

1. Set the laser power meter on the objective lens of the optical pick-up.
   Connect the digital volt meter to CN105 pin ① (I+3V) and CN105 pin ② (IOP).
2. Then, rotate the [⏮ AMS ⏭] (MD) knob and display "LDPWR CHECK" (C13).
3. Press the [YES] button once and display "L 0.93 mW $ ▯▯". Check that the reading of the laser power meter becomes the specified value.

Note: Never allow the laser emission at 8.65 mW for 1.5 seconds or longer.

Specified Value: 0.84 to 0.92 mW (KMS-262A)
0.90 to 0.96 mW (KMS-262E)

4. Press the [YES] button once more and display " L 8.65 mW $ ▯▯". Check that the reading the laser power meter and digital volt meter satisfy the specified value.

Specified Value:

Laser power meter reading : 8.1 to 8.7 mW (KMS-262A)
8.4 to 8.9 mW (KMS-262E)
Digital voltmeter reading : Optical pick-up displayed value ± 10%

(Optical pick-up label)

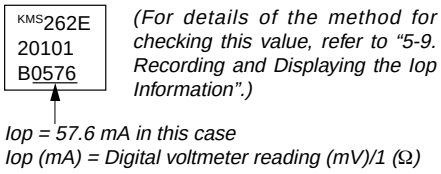

5. Press the [MENU/NO] button and display "LDPWR CHECK" (C13) and stop the laser emission.
   (The [MENU/NO] button is effective at all times to stop the laser emission.)

Note: After step 4, each time the [YES] button is pressed, the display will be switched between "L 0.73 mW $ ▯▯", "L 7.70 mW $ ▯▯", and "L Wp ホセイ $ ▯▯". Nothing needs to be performed here.

Check Location: BD (MD) board (see page 43)

5-7-3. Iop Compare

The current Iop value at laser power 8.65 mW (KMS-262E) or 8.4 mW (KMS-262A) output and reference Iop value (set at shipment) written in the nonvolatile memory are compared, and the rate of increase/decrease will be displayed in percentage.

Note: Perform this function with the optical pick-up set at room temperature.

Procedure:

1. Rotate the [⏮ AMS ⏭] (MD) knob to display "Iop Compare" (C27).
2. Press the [YES] button and start measurements.
3. When measurements complete, the display changes to "±xx%yy".
   xx is the percentage of increase/decrease, and OK or NG is displayed at yy to indicate whether the percentage of increase/decrease is within the allowable range.
4. Press the [MENU/NO] button to end this mode.

Downloaded from www.Manualslib.com manuals search engine

5-7-4. Auto Check

This test mode performs CREC and CPLAY automatically for mainly checking the characteristics of the optical pick-up. To perform this test mode, the laser power must first be checked. Perform Auto Check after the laser power check and Iop compare.

Procedure:

1. Display “AUTO CHECK” and press the YES button. If “LDPWR ミチェック” is displayed, it means that the laser power check has not been performed. In this case, perform the laser power check and Iop compare, and then repeat from step 1.
2. If a disc is in the mechanical deck, it will be ejected forcibly. “DISC IN” will be displayed in this case. Load a test disc (MDW-74/GA-1) which can be recorded.
3. If a disk is loaded at step 2, the check will start automatically.
4. When “XX CHECK” is displayed, the item corresponding to XX will be performed.
   When “06 CHECK” completes, the disc loaded at step 2 will be ejected. “DISC IN” will be displayed. Load the check disc (MD) (TDYS-1).
5. When the disc is loaded in the step 4, the check will automatically be resumed from “07 CHECK”.
6. After completing to test item “0C check”, check OK or NG will be displayed. If all items are OK, “CHECK ALL OK” will be displayed. If any item is NG, it will be displayed as “NG:xxxx”.

When “CHECK ALL OK” is displayed, it means that the optical pick-up is normal. Check the operations of the other spindle motor, sled motor, etc.
When displayed as “NG:xxxx”, it means that the optical pick-up is faulty. In this case, replace the optical pick-up.

5-7-5. Other Checks

All the following checks are performed by the Auto Check mode. They therefore need not be performed in normal operation.
6-6. Traverse Check
6-7. Focus Bias Check
6-8. C PLAY Check
6-9. Self-Recording/Playback Check

5-7-6. Traverse Check

Note 1: Data will be erased during MO reading if a recorded disc is used in this adjustment.
Note 2: If the traverse waveform is not clear, connect the oscilloscope as shown in the following figure so that it can be seen more clearly.

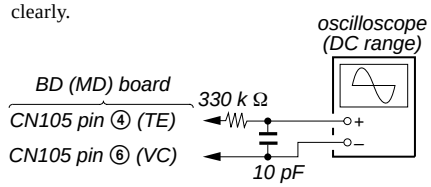

Connection:

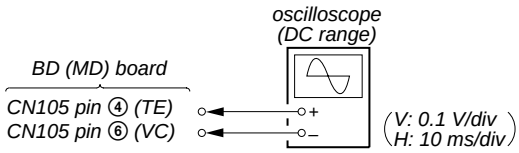

Checking Procedure:

1. Connect an oscilloscope to CN105 pin ④ (TE) and CN105 pin ⑥ (VC) on the BD (MD) board.
2. Load a disc (any available on the market). (Refer to Note 1)
3. Turn the ⏮ AMS ⏭ (MD) knob to display “EF MO CHECK”(C14).
4. Press the YES button to display “EFB = MO-R”.
   (Laser power READ power/Focus servo ON/tracking servo OFF/spindle (S) servo ON)
5. Observe the waveform of the oscilloscope, and check that the specified value is satisfied. Do not turn the ⏮ AMS ⏭ (MD) knob.
   (Read power traverse checking)

Traverse Waveform

Specified value : Below 10% offset value

$$\text{Offset value (\%)} = \frac{|A - B|}{2\,(A + B)} \times 100$$

6. Press the YES button to display “EFB = MO-W”.
7. Observe the waveform of the oscilloscope, and check that the specified value is satisfied. Do not turn the ⏮ AMS ⏭ (MD) knob.
   (Write power traverse checking)

Traverse Waveform

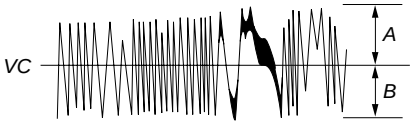

Specified value : Below 10% offset value

$$\text{Offset value (\%)} = \frac{|A - B|}{2\,(A + B)} \times 100$$

Downloaded from www.Manualslib.com manuals search engine

8. Press the YES button to display "EFB = ▯▯ MO-P". Then, the optical pick-up moves to the pit area automatically and servo is imposed.
9. Observe the waveform of the oscilloscope, and check that the specified value is satisfied. Do not turn the ⏮ AMS ⏭ (MD) knob.

Traverse Waveform

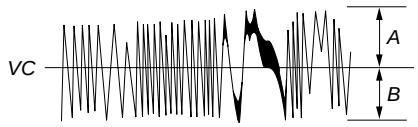

Specified value : Below 10% offset value

$$\text{Offset value (\%)} = \frac{|A - B|}{2\,(A + B)} \times 100$$

10. Press the YES button to display "EF MO CHECK (C14)". The disc stops rotating automatically.
11. Press the EJECT button and take out the disc.
12. Load the check disc (MD) (TDYS-1).
13. Turn the ⏮ AMS ⏭ (MD) knob and display "EF CD CHECK" (C15).
14. Press the YES button to display "EFB = ▯▯ CD". Servo is imposed automatically.
15. Observe the waveform of the oscilloscope, and check that the specified value is satisfied. Do not turn the ⏮ AMS ⏭ (MD) knob.

Traverse Waveform

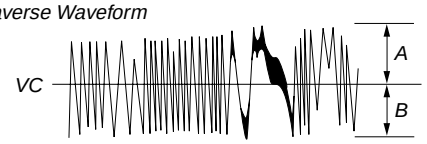

Specified value : Below 10% offset value

$$\text{Offset value (\%)} = \frac{|A - B|}{2\,(A + B)} \times 100$$

16. Press the YES button to display "EF CD CHECK" (C15).
17. Press the EJECT button and take out the check disc (MD) (TDYS-1).

Check Location: BD (MD) board (see page 43)

5-7-7. Focus Bias Check

Change the focus bias and check the focus tolerance amount.

Checking Procedure:

1. Load the test disk (MDW-74/GA-1).
2. Turn the ⏮ AMS ⏭ (MD) knob to display "CPLAY 2 MODE" (C36).
3. Press the YES button to display "CPLAY 2MID".
4. Press the MENU/NO button when "C = ▯▯▯▯ AD = ▯▯" is displayed.
5. Turn the ⏮ AMS ⏭ (MD) knob to display "FBIAS CHECK" (C16).
6. Press the YES button to display "▯▯▯▯/▯▯ c = ▯▯". The first four digits indicate the C error rate, the two digits after [/] indicate ADER, and the 2 digits after [c =] indicate the focus bias value.
7. Press the YES button to display "▯▯▯▯/▯▯ b = ▯▯". Check that the C error is about 220 and ADER is below 2.
8. Press the YES button to display "▯▯▯▯/▯▯ a = ▯▯". Check that the C error is about 220 and ADER is below 2.
9. Press the MENU/NO button, then press the EJECT button and take out the test disc.

5-7-8. C PLAY Check

MO Error Rate Check

Checking Procedure:

1. Load the test disk (MDW-74/GA-1).
2. Turn the ⏮ AMS ⏭ (MD) knob to display "CPLAY 2 MODE" (C36).
3. Press the YES button to display "CPLAY 2MID".
4. The display changes to "C = ▯▯▯▯ AD = ▯▯".
5. If the C error rate is below 20, check that ADER is 00.
6. Press the MENU/NO button to stop playback, then press the EJECT button and take out the test disc.

CD Error Rate Check

Checking Procedure:

1. Load the check disc (MD) (TDYS-1).
2. Turn the ⏮ AMS ⏭ (MD) knob to display "CPLAY 2 MODE" (C36).
3. Press the YES button to display "CPLAY 2MID".
4. The display changes to "C = ▯▯▯▯ AD = ▯▯".
5. Check that the C error rate is below 20.
6. Press the MENU/NO button to stop playback, then press the EJECT button and take out the check disc.

5-7-9. Self-Recording/playback Check

Prepare a continuous recording disc using the unit to be repaired and check the error rate.

Checking Procedure:

1. Load a recordable disc (blank disc).
2. Turn the ⏮ AMS ⏭ (MD) knob to display "CREC 2MODE" (C37).
3. Press the YES button to display "CREC 2MID".
4. When recording starts, lights up "REC" and display "CREC 2 @@@@" (@@@@ is the address).
5. About 1 minute later, press the MENU/NO button to stop continuous recording.
6. Turn the ⏮ AMS ⏭ (MD) knob to display "CPLAY 2 MODE" (C36).
7. Press the YES button to display "CPLAY 2MID".
8. "C = ▯▯▯▯ AD = ▯▯" will be displayed.
9. Check that the C error becomes below 20 and the AD error below 2.
10. Press the MENU/NO button to stop playback, then press the EJECT button and take out the disc.

5-8. INITIAL SETTING OF ADJUSTMENT VALUE

Note:

Mode which sets the adjustment results recorded in the non-volatile memory to the initial setting value. However the results of the temperature compensation offset adjustment will not change to the initial setting value.

If initial setting is performed, perform all adjustments again excluding the temperature compensation offset adjustment.

For details of the initial setting, refer to "5-5. Precautions for Adjustments" and execute the initial setting before the adjustment as required.

Setting Procedure:

1. Turn the ⏮ AMS ⏭ (MD) knob to display "ADJ CLEAR" (C28).
2. Press the YES button. "Complete!" will be displayed momentarily and initial setting will be executed, after which "ADJ CLEAR" (C28) will be displayed.

Downloaded from www.Manualslib.com manuals search engine

5-9. RECORDING AND DISPLAYING THE IOP INFORMATION

The Iop data can be recorded in the non-volatile memory. The Iop value on the optical pick-up label and the Iop value after the adjustment will be recorded. Recording these data eliminates the need to read the label on the optical pick-up.

Recording Procedure:

1. Turn the [⏮ AMS ⏭] (MD) knob to display "Iop Write" (C05), and press the [YES] button.
2. The display becomes "Ref=@@@.@" (@ is an arbitrary number) and the numbers which can be changed will blink.
3. Input the Iop value on the optical pick-up label.
   To select the number : Turn the [⏮ AMS ⏭] (MD) knob.
   To select the digit : Press the [⏮ AMS ⏭] (MD) knob
4. When the [YES] button is pressed, the display becomes "Measu=@@@.@" (@ is an arbitrary number).
5. As the adjustment results are recorded for the 4 value. Leave it as it is and press the [YES] button.
6. "Complete!!" will be displayed momentarily. The value will be recorded in the non-volatile memory and the display will become "Iop Write" (C05).

Display Procedure:

1. Turn the [⏮ AMS ⏭] (MD) knob to display "Iop Read" (C26), and press the [YES] button.
2. "@@.@/##.#" is displayed and the recorded contents are displayed.
   @@.@ indicates the Iop value on the optical pick-up label.
   ##.# indicates the Iop value after adjustment
3. To end, press the [⏮ AMS ⏭] (MD) button or [MENU/NO] button to display "Iop Read" (C26).

5-10. TEMPERATURE COMPENSATION OFFSET ADJUSTMENT

Save the temperature data at that time in the non-volatile memory as 25 ˚C reference data.

Note:

1. Usually, do not perform this adjustment.
2. Perform this adjustment in an ambient temperature of 22 ˚C to 28 ˚C. Perform it immediately after the power is turned on when the internal temperature of the unit is the same as the ambient temperature of 22 ˚C to 28 ˚C.
3. When D101 has been replaced, perform this adjustment after the temperature of this part has become the ambient temperature.

Adjusting Procedure:

1. Turn the [⏮ AMS ⏭] (MD) knob to display "TEMP ADJUS" (C03).
2. Press the [YES] button to select the "TEMP ADJUS" mode.
3. "TEMP = ▯▯ [OK" and the current temperature data will be displayed.
4. To save the data, press the [YES] button.
   When not saving the data, press the [MENU/NO] button.
5. When the [YES] button is pressed, "TEMP = ▯▯ SAVE" will be displayed and turned back to "TEMP ADJUS" (C03) display then. When the [MENU/NO] button is pressed, "TEMP ADJUS" (C03) will be displayed immediately.

Specified Value:

The "TEMP = ▯▯" should be within "E0 - EF", "F0 - FF", "00 - 0F", "10 - 1F" and "20 - 2F".

5-11. LASER POWER ADJUSTMENT

Check the Iop value of the optical pick-up before adjustments. (Refer to 5-9. Recording and Displaying Iop Information)

Connection:

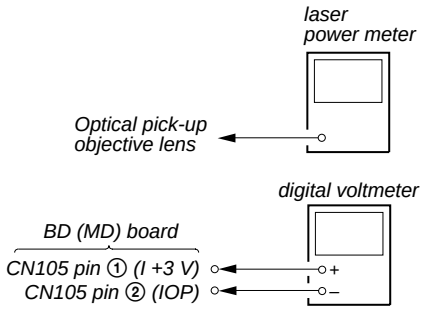

Adjusting Procedure:

1. Set the laser power meter on the objective lens of the optical pick-up.
   Connect the digital voltmeter to CN105 pin ① (I+3V) and CN105 pin ② (IOP) on the BD (MD) board.
2. Turn the [⏮ AMS ⏭] (MD) knob to display "LDPWR ADJUS" (C04).
   (Laser power : For adjustment)
3. Press the [YES] button once to display "L 0.93 mW $ ▯▯".
4. Turn the [⏮ AMS ⏭] (MD) knob so that the reading of the laser power meter becomes the specified value. Press the [YES] button after setting the range knob of the laser power meter to 10 mW, and save the adjustment results. ("L SAVE $ ▯▯" will be displayed for a moment)

Specified Value: 0.85 to 0.91 mW (KMS-262A)
0.90 to 0.95 mW (KMS-262E)

5. Then "L 8.65 mW $ ▯▯" will be displayed.
6. Turn the [⏮ AMS ⏭] (MD) knob so that the reading of the laser power meter becomes the specified value, press the [YES] button to save it.

Specified Value: 8.2 to 8.6 mW (KMS-262A)
8.5 to 8.8 mW (KMS-262E)

Note: Do not perform the emission with 8.65 mW more than 15 seconds continuously.

7. Then, turn the [⏮ AMS ⏭] (MD) knob to display "LDPWR CHECK" (C13).
8. Press the [YES] button once to display "L 0.93 mW $ ▯▯". Check that the reading of the laser power meter becomes the specified value.

Specified Value: 0.84 to 0.92 mW (KMS-262A)
0.90 to 0.96 mW (KMS-262E)

Downloaded from www.Manualslib.com manuals search engine

9. Press the YES button once more to display "L 8.65 mW $ ". Check that the reading the laser power meter and digital voltmeter satisfy the specified value.
   Note down the digital voltmeter reading value.

Specified Value:

Laser power meter reading : 8.1 to 8.7 mW (KMS-262A)
8.4 to 8.9 mW (KMS-262E)

Digital voltmeter reading : Value on the optical pick-up label ±10%

(Optical pick-up label)

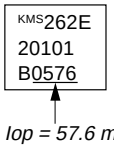

(For details of the method for checking this value, refer to "5-9. Recording and Displaying the Iop Information".)

Iop = 57.6 mA in this case
Iop (mA) = Digital voltmeter reading (mV)/1 (Ω)

10. Press the MENU/NO button to display "LDPWR CHECK" (C13) and stop the laser emission.
    (The MENU/NO button is effective at all times to stop the laser emission.)
11. Turn the ⏮ AMS ⏭ (MD) knob to display "Iop Write" (C05).
12. Press the YES button. When the display becomes Ref=@@@.@ (@ is an arbitrary number), press the YES button to display "Measu=@@@.@" (@ is an arbitrary number).
13. The numbers which can be changed will blink. Input the Iop value noted down at step 9.
    To select the number : Turn the ⏮ AMS ⏭ (MD) knob.
    To select the digit : Press the ⏮ AMS ⏭ (MD) knob.
14. When the YES button is pressed, "Complete!" will be displayed momentarily. The value will be recorded in the non-volatile memory and the display will become "Iop Write" (C05).

Note: After step 9, each time the YES button is pressed, the display will be switched "L 0.73 mW $ ", "L 7.70 mW $ ", and "L Wp ホセイ $ ". Nothing needs to be performed here.

Adjustment Location: BD (MD) board (see page 43)

11. Iop NV SAVE

Write the reference values in the nonvolatile memory to perform "Iop compare". As this involves rewriting the reference values, do not perform this procedure except when adjusting the laser power during replacement of the optical pick-up and when replacing the IC12. Otherwise the optical pick-up check may deteriorate.

Note: Perform this function with the optical pick-up set at room temperature.

Procedure:

1. Rotate the ⏮ AMS ⏭ (MD) knob to display "Iop NV Save" (C06).
2. Press the YES button and display "Iop [stop]".
3. After the display changes to "Iop =xxsave?", press the YES button.
4. After "Complete!" is displayed momentarily, the display changes to "Iop 8.4 mW".
5. After the display changes to "Iop=yysave?", press the YES button.
6. When "Complete!" is displayed, it means that Iop NV saving has been completed.

5-13. TRAVERSE ADJUSTMENT

Note 1: Data will be erased during MO reading if a recorded disc is used in this adjustment.

Note 2: If the traverse waveform is not clear, connect the oscilloscope as shown in the following figure so that it can be seen more clearly.

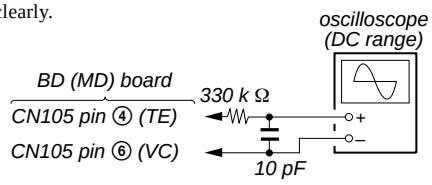

Connection:

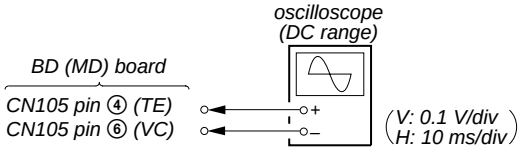

Adjusting Procedure:

1. Connect an oscilloscope to CN105 pin ④ (TE) and CN105 pin ⑥ (VC) on the BD (MD) board.
2. Load a disc (any available on the market). (Refer to Note 1)
3. Turn the ⏮ AMS ⏭ (MD) knob to display "EF MO ADJUS" (C07).
4. Press the YES button to display "EFB = MO-R".
   (Laser power READ power/Focus servo ON/tracking servo OFF/spindle (S) servo ON)
5. Turn the ⏮ AMS ⏭ (MD) knob so that the waveform of the oscilloscope becomes the specified value.
   (When the ⏮ AMS ⏭ (MD) knob is turned, the of "EFB= " changes and the waveform changes.) In this adjustment, waveform varies at intervals of approx. 2%. Adjust the waveform so that the specified value is satisfied as much as possible.
   (Read power traverse adjustment)

Traverse Waveform

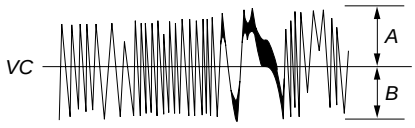

Specification A = B

6. Press the YES button and save the result of adjustment to the non-volatile memory ("EFB = SAVE" will be displayed for a moment. Then "EFB = MO-W" will be displayed).

Downloaded from www.Manualslib.com manuals search engine

7. Turn the [⏮ AMS ⏭] (MD) knob so that the waveform of the oscilloscope becomes the specified value.
   (When the [⏮ AMS ⏭] (MD) knob is turned, the ▯▯ of "EFB= ▯▯" changes and the waveform changes.) In this adjustment, waveform varies at intervals of approx. 2%. Adjust the waveform so that the specified value is satisfied as much as possible.
   (Write power traverse adjustment)

Traverse Waveform

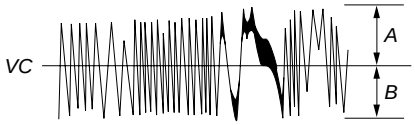

Specification A = B

8. Press the [YES] button, and save the adjustment results in the non-volatile memory. ("EFB = ▯▯ SAVE" will be displayed for a moment)
9. "EFB = ▯▯ MO-P" will be displayed.
   The optical pick-up moves to the pit area automatically and servo is imposed.
10. Turn the [⏮ AMS ⏭] (MD) knob until the waveform of the oscilloscope moves closer to the specified value.
    In this adjustment, waveform varies at intervals of approx. 2%. Adjust the waveform so that the specified value is satisfied as much as possible.

Traverse Waveform

Specification A = B

11. Press the [YES] button, and save the adjustment results in the non-volatile memory. ("EFB = ▯▯ SAVE" will be displayed for a moment.)
    Next "EF MO ADJUS" (C07) is displayed. The disc stops rotating automatically.
12. Press the [EJECT] button and take out the disc.
13. Load the check disc (MD) (TDYS-1).
14. Turn the [⏮ AMS ⏭] (MD) knob to display "EF CD ADJUS" (C08).
15. Press the [YES] button to display "EFB = ▯▯ CD". Servo is imposed automatically.
16. Turn the [⏮ AMS ⏭] (MD) knob so that the waveform of the oscilloscope moves closer to the specified value.
    In this adjustment, waveform varies at intervals of approx. 2%. Adjust the waveform so that the specified value is satisfied as much as possible.

Traverse Waveform

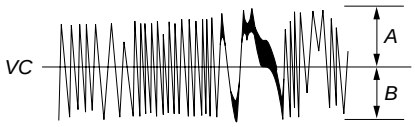

Specification A = B

17. Press the [YES] button, display "EFB = ▯▯ SAVE" for a moment and save the adjustment results in the non-volatile memory.
    Next "EF CD ADJUS" (C08) will be displayed.
18. Press the [EJECT] button and take out the disc (MD) (TDYS-1).

Adjustment Location: BD (MD) board (see page 43)

5-14. FOCUS BIAS ADJUSTMENT

Adjusting Procedure:

1. Load the test disc (MDW-74/GA-1).
2. Turn the [⏮ AMS ⏭] (MD) knob to display "CPLAY 2 MODE" (C36).
3. Press the [YES] button to display "CPLAY 2MID".
4. Press the [MENU/NO] button when "C = ▯▯▯▯ AD = ▯▯" is displayed.
5. Turn the [⏮ AMS ⏭] (MD) knob to display "FBIAS ADJUS" (C09).
6. Press the [YES] button to display "▯▯▯▯/▯▯ a = ▯▯".
   The first four digits indicate the C error rate, the two digits after "/ " indicate ADER, and the 2 digits after "a =" indicate the focus bias value.
7. Turn the [⏮ AMS ⏭] (MD) knob clockwise and find the focus bias value at which the C error rate becomes about 200 (refer to Note 2).
8. Press the [YES] button to display "▯▯▯▯/▯▯ b = ▯▯".
9. Turn the [⏮ AMS ⏭] (MD) knob counterclockwise and find the focus bias value at which the C error rate becomes about 200.
10. Press the [YES] button to display "▯▯▯▯/▯▯ c = ▯▯".
11. Check that the C error rate is below 20 and ADER is 00. Then press the [YES] button.
12. If the "(▯▯)" in "▯▯ - ▯▯ - ▯▯ (▯▯)" is above 20, press the [YES] button.
    If below 20, press the [MENU/NO] button and repeat the adjustment from step 2.
13. Press the [EJECT] button and take out the disc.

Note 1: The relation between the C error and focus bias is as shown in the following figure. Find points A and B in the following figure using the above adjustment. The focal point position C is automatically calculated from points A and B.

Note 2: As the C error rate changes, perform the adjustment using the average vale.

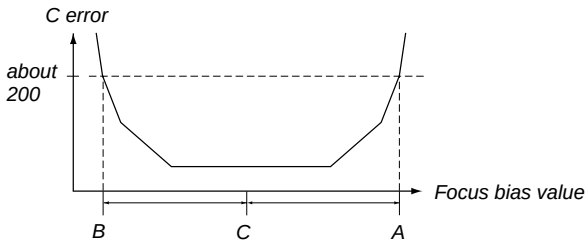

Downloaded from www.Manualslib.com manuals search engine

5-15. ERROR RATE CHECK

5-15-1. CD Error Rate Check

Checking Procedure:

1. Load the check disc (MD) (TDYS-1).
2. Turn the [⏮ AMS ⏭] (MD) knob to display "CPLAY 2 MODE" (C36).
3. Press the [YES] button twice and display "CPLAY 2MID".
4. The display changes to "C = ▯▯▯▯ AD = ▯▯".
5. Check that the C error rate is below 20.
6. Press the [MENU/NO] button to stop playback, then press the [EJECT] button and take out the check disc.

5-15-2. MO Error Rate Check

Checking Procedure:

1. Load the continuously-recorded disc. (Refer to "5-6. USING THE CONTINUOUSLY RECORDED DISC")
2. Turn the [⏮ AMS ⏭] (MD) knob to display "CPLAY 2 MODE" (C36).
3. Press the [YES] button to display "CPLAY 2MID".
4. The display changes to "C = ▯▯▯▯ AD = ▯▯".
5. If the C error rate is below 20, check that ADER is 00.
6. Press the [MENU/NO] button to stop playback, then press the [EJECT] button and take out the test disc.

5-16. FOCUS BIAS CHECK

Change the focus bias and check the focus tolerance amount.

Checking Procedure:

1. Load the continuously-recorded disc. (Refer to "5-6. USING THE CONTINUOUSLY RECORDED DISC")
2. Turn the [⏮ AMS ⏭] (MD) knob to display "CPLAY 2 MODE" (C36).
3. Press the [YES] button twice to display "CPLAY 2MID".
4. Press the [MENU/NO] button when "C = ▯▯▯▯ AD = ▯▯" is displayed.
5. Turn the [⏮ AMS ⏭] (MD) knob to display "FBIAS CHECK" (C16).
6. Press the [YES] button to display "▯▯▯▯/▯▯ c = ▯▯".
   The first four digits indicate the C error rate, the two digits after "/ " indicate ADER, and the 2 digits after "c =" indicate the focus bias value.
7. Press the [YES] button and display "▯▯▯▯/▯▯ b = ▯▯".
   Check that the C error is about 220 and ADER is below 2.
8. Press the [YES] button and display "▯▯▯▯/▯▯ a = ▯▯".
   Check that the C error is about 220 and ADER is below 2
9. Press the [MENU/NO] button, then press the [EJECT] button and take out the disc.

Note: If the C error and ADER are above other than the specified value at points a (step 8. in the above) or b (step 7. in the above), the focus bias adjustment may not have been carried out properly. Adjust perform the beginning again.

5-17. AUTO GAIN CONTROL OUTPUT LEVEL ADJUSTMENT

Be sure to perform this adjustment when the optical pick-up is replaced.
If the adjustment results becomes "Adjust NG!", the optical pick-up may be faulty or the servo system circuits may be abnormal.

5-17-1. CD Auto Gain Control Output Level Adjustment

Adjusting Procedure:

1. Load the check disc (MD) (TDYS-1).
2. Turn the [⏮ AMS ⏭] (MD) knob to display "AG Set (CD)" (C11).
3. When the [YES] button is pressed, the adjustment will be performed automatically.
   "Complete!!" will then be displayed momentarily when the value is recorded in the non-volatile memory, after which the display changes to "AG Set (CD)" (C11).
4. Press the [EJECT] button and take out the check disc.

5-17-2. MO Auto Gain Control Output Level Adjustment

Adjusting Procedure:

1. Load the test disc (MDW-74/GA-1).
2. Turn the [⏮ AMS ⏭] (MD) knob to display "AG Set (MO)" (C10).
3. When the [YES] button is pressed, the adjustment will be performed automatically.
   "Complete!!" will then be displayed momentarily when the value is recorded in the non-volatile memory, after which the display changes to "AG Set (MO)" (C10).
4. Press the [EJECT] button and take out the test disc.

Downloaded from www.Manualslib.com manuals search engine

Adjustment and checking Location:

– BD (MD) BOARD (Side A) –

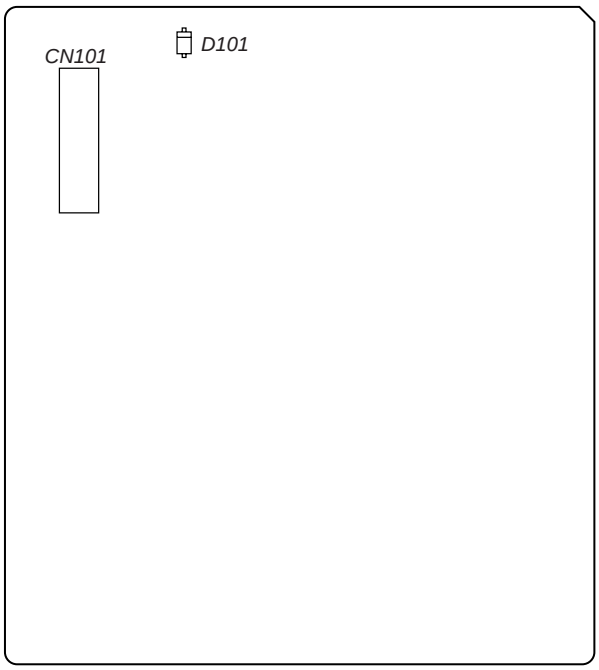

– BD (MD) BOARD (Side B) –

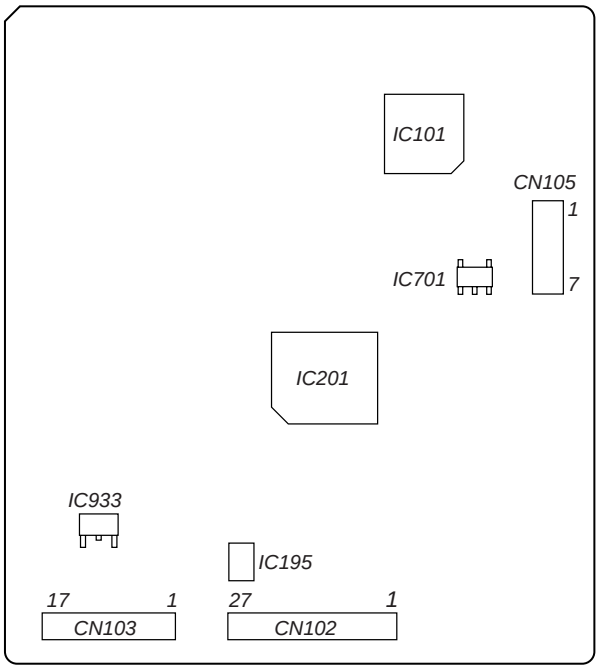

1. I+3V
2. IOP
3. GND
4. TE
5. FE
6. VC
7. RF

Note: It is useful to use the jig for checking the waveform. (Refer to Servicing Notes on page 11)

Downloaded from www.Manualslib.com manuals search engine

CD SECTION

Note:
1. CD Block is basically designed to operate without adjustment. Therefore, check each item in order given.
2. Use YEDS-18 disc (3-702-101-01) unless otherwise indicated.
3. Use an oscilloscope with more than 10MΩ impedance.
4. Clean the object lens by an applicator with neutral detergent when the signal level is low than specified value with the following checks.

S Curve Check

Connection:

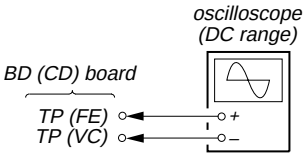

Procedure:
1. Connect oscilloscope to test point TP (FE) and TP (VC) on BD (CD) board.
2. Turn the power on.
3. Put disc (YEDS-18) in.
4. Enter the test mode, select the BU Test and press the ⏮ AMS ⏭ (CD) knob to display "bdt S CURVED".
5. Press the ⏮ AMS ⏭ (CD) knob. "LD AL" is displayed and playback starts automatically.
6. Check the oscilloscope waveform (S-curve) is symmetrical between A and B. And confirm peak to peak level within 3.6 ± 0.5 Vp-p.
7. Press the MENU/NO button to stop playback.
8. Exit from the test mode.
   (Refer to the TEST MODE Section)

S-curve waveform

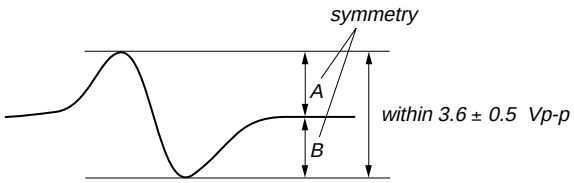

Note:
- Try to measure several times to make sure than the ratio of A : B or B : A is more than 10 : 7.
- Take sweep time as long as possible and light up the brightness to obtain best waveform.

Check Location: BD (CD) board (see page 45)

RF Level Check

Connection:

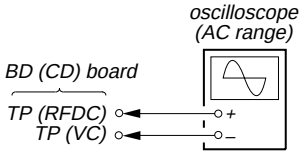

Procedure:
1. Connect oscilloscope to test point TP (RFDC) and TP (VC) on BD (CD) board.
2. Turn ON the power.
3. Put disc (YEDS-18) in to play the number five track.
4. Confirm that oscilloscope waveform is clear and check RF signal level is correct or not.

Note: A clear RF signal waveform means that the shape "◊" can be clearly distinguished at the center of the waveform.

RF signal waveform

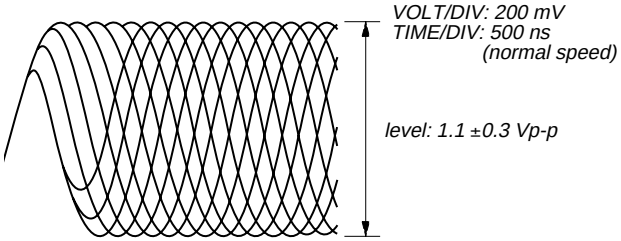

Checking Location: BD (CD) board (see page 45)

E-F Balance (1 Track Jump) Check

Connection:

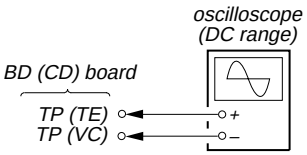

Procedure:
1. Connect oscilloscope to test point TP (TE) and TP (VC) on BD (CD) board.
2. Press the I/⏻ button to turn the power on.
3. Put disc (YEDS-18) in to play the number five track.
4. Enter the service mode, press the INPUT button until "TRV ON" is displayed. (The tracking servo and the sledding servo are turned OFF)
5. Rotate RV101 on BD (CD) board to adjust A (DC voltage) of the center of the oscilloscope waveform becomes 0 V.
6. Enter the service mode, press the INPUT button until "TRV ON" is displayed (The tracking servo and the sledding servo are turned OFF), confirm A (DC voltage) at that time is 0 V.

Traverse Waveform

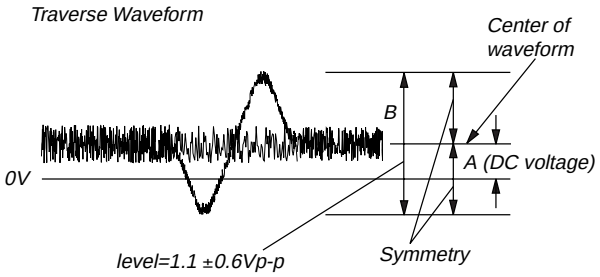

Checking Location: BD (CD) board (see page 45)

Adjustment after CD Base Unit (BU-30BBD61B) is Replaced

Perform the "E-F Balance (1 track jump) check".

Downloaded from www.Manualslib.com manuals search engine

Checking Location:

– BD (CD) BOARD (Conductor Side) –

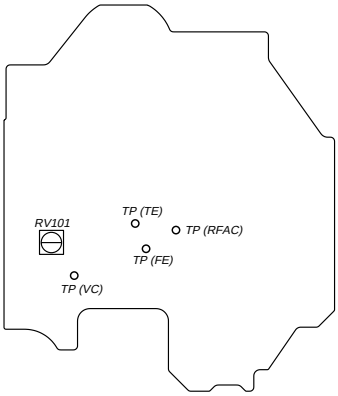

Downloaded from www.Manualslib.com manuals search engine

SECTION 6
DIAGRAMS

6-1. BLOCK DIAGRAM – CD Section –

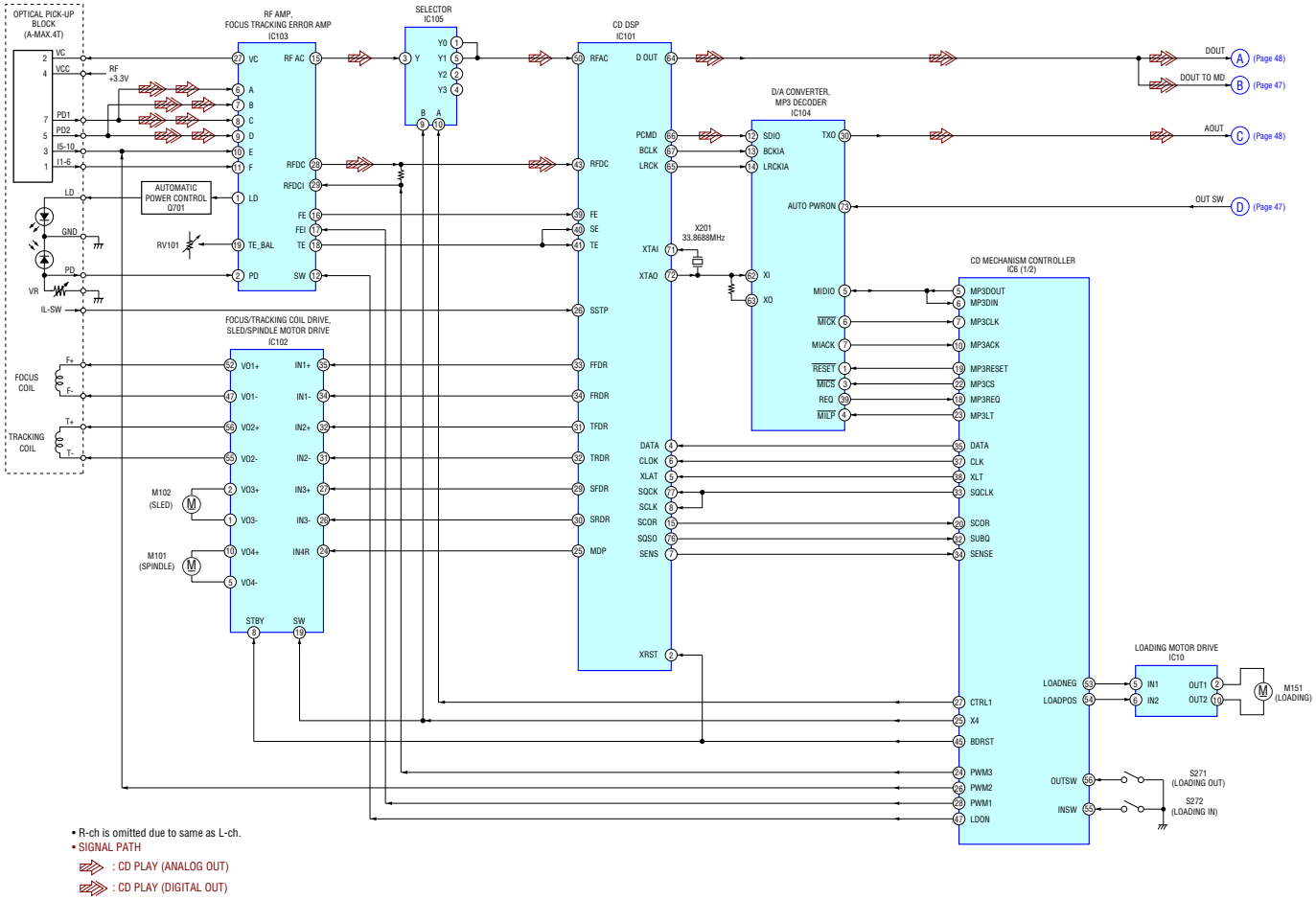

Downloaded from www.Manualslib.com manuals search engine

6-2. BLOCK DIAGRAM – MD Section –

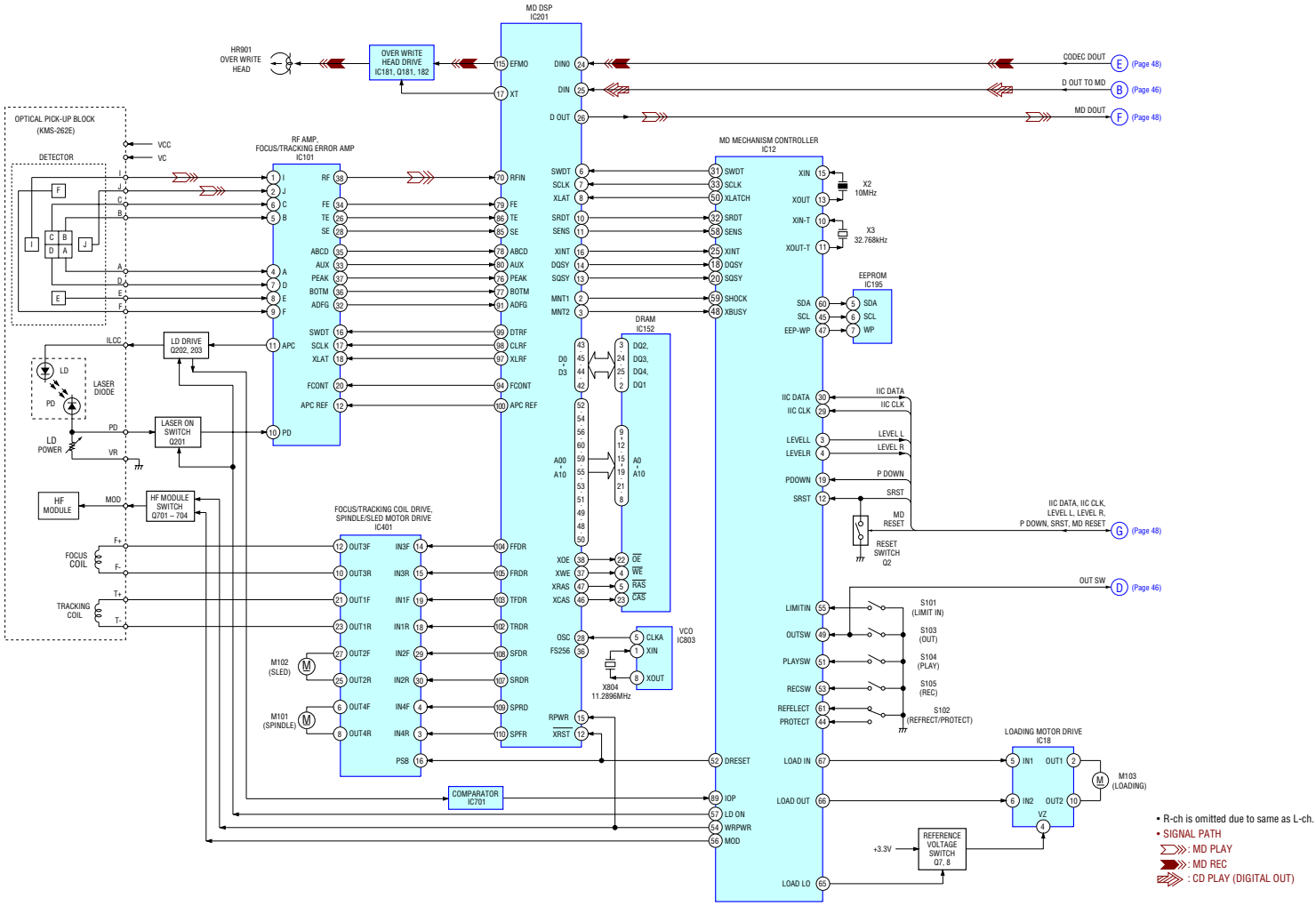

Downloaded from www.Manualslib.com manuals search engine

6-3. BLOCK DIAGRAM – MAIN Section –

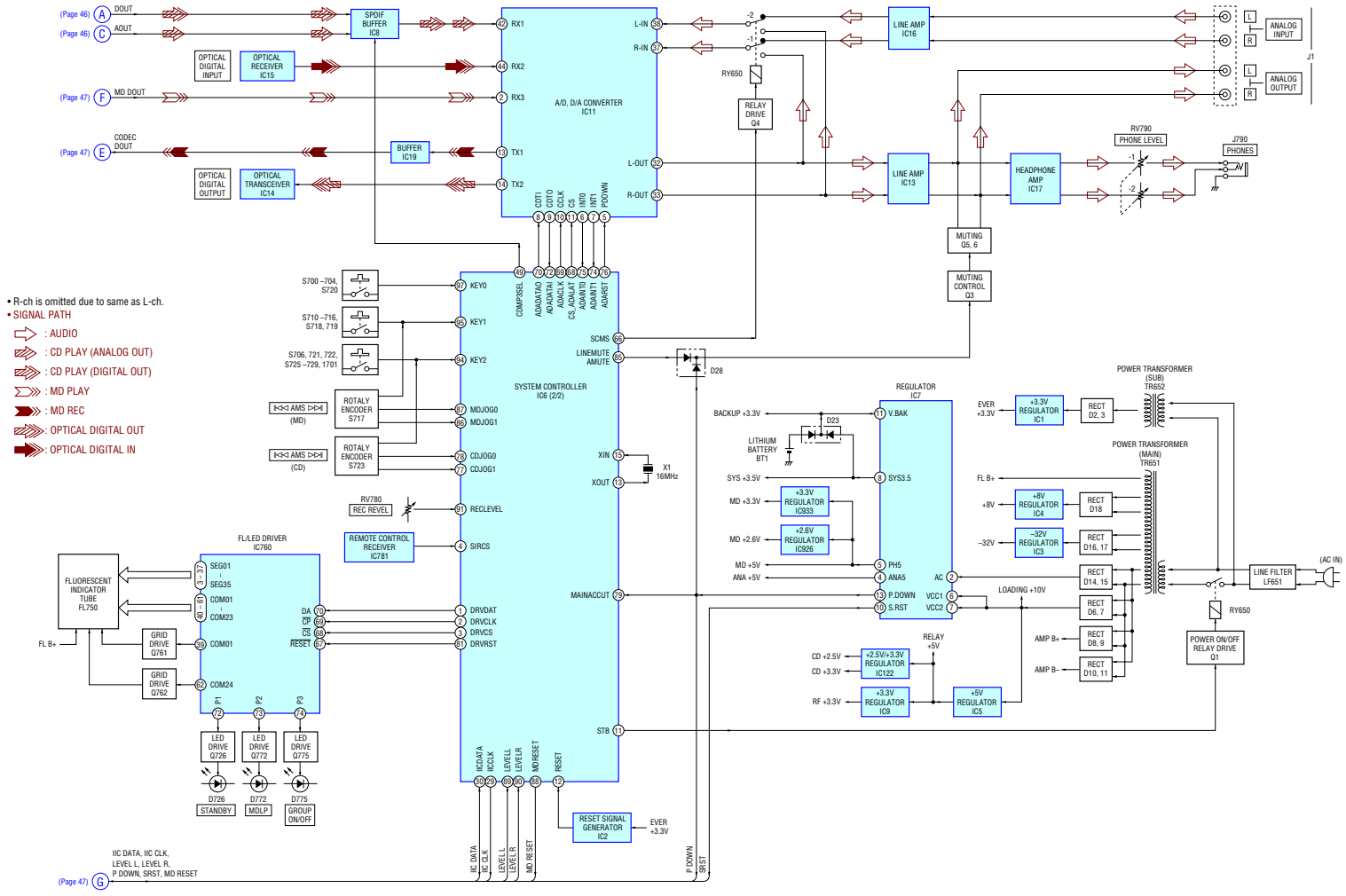

Downloaded from www.Manualslib.com manuals search engine

6-4. NOTE FOR PRINTED WIRING BOARDS AND SCHEMATIC DIAGRAMS

Note on Printed Wiring Boards:

- ○——— : parts extracted from the component side.
- ——— : parts extracted from the conductor side.
- ○ : Through hole.
- △ : internal component.
- ▬ : Pattern from the side which enables seeing.

(The other layers' patterns are not indicated.)

Caution:	
Pattern face side: (Conductor Side)	Parts on the pattern face side seen from the pattern face are indicated.
Parts face side: (Component Side)	Parts on the parts face side seen from the parts face are indicated.

Caution:	
Pattern face side: (Side B)	Parts on the pattern face side seen from the pattern face are indicated.
Parts face side: (Side A)	Parts on the parts face side seen from the parts face are indicated.

Note on Schematic Diagram:

- All capacitors are in μF unless otherwise noted. pF: μμF 50 WV or less are not indicated except for electrolytics and tantalums.
- All resistors are in Ω and 1/4 W or less unless otherwise specified.
- △ : internal component.
- ▭ : panel designation.

Note: The components identified by mark ⚠ or dotted line with mark ⚠ are critical for safety.
Replace only with part number specified.

- ▬▬ : B+ Line.
- ▬ ▬ ▬ : B– Line.
- Voltages are taken with a VOM (Input impedance 10 MΩ). Voltage variations may be noted due to normal production tolerances.
- Waveforms are taken with a oscilloscope. Voltage variations may be noted due to normal production tolerances.
- Circled numbers refer to waveforms.
- Signal path.
  - ⇨ : AUDIO
  - ⇨ : CD PLAY (ANALOG OUT)
  - ⇨ : CD PLAY (DIGITAL OUT)
  - : MD PLAY
  - : MD REC
  - ⇨ : OPTICAL DIGITAL OUT
  - : OPTICAL DIGITAL IN

- **Circuit Boards Location**

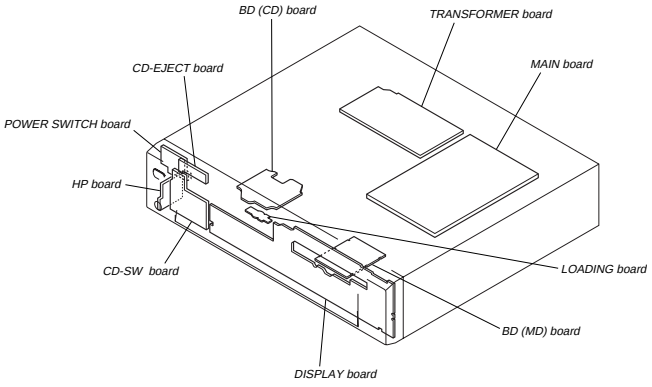

Downloaded from www.Manualslib.com manuals search engine

6-5. PRINTED WIRING BOARD – BD (CD) Section –

• See page 49 for Circuit Boards Location. :Uses unleaded solder.

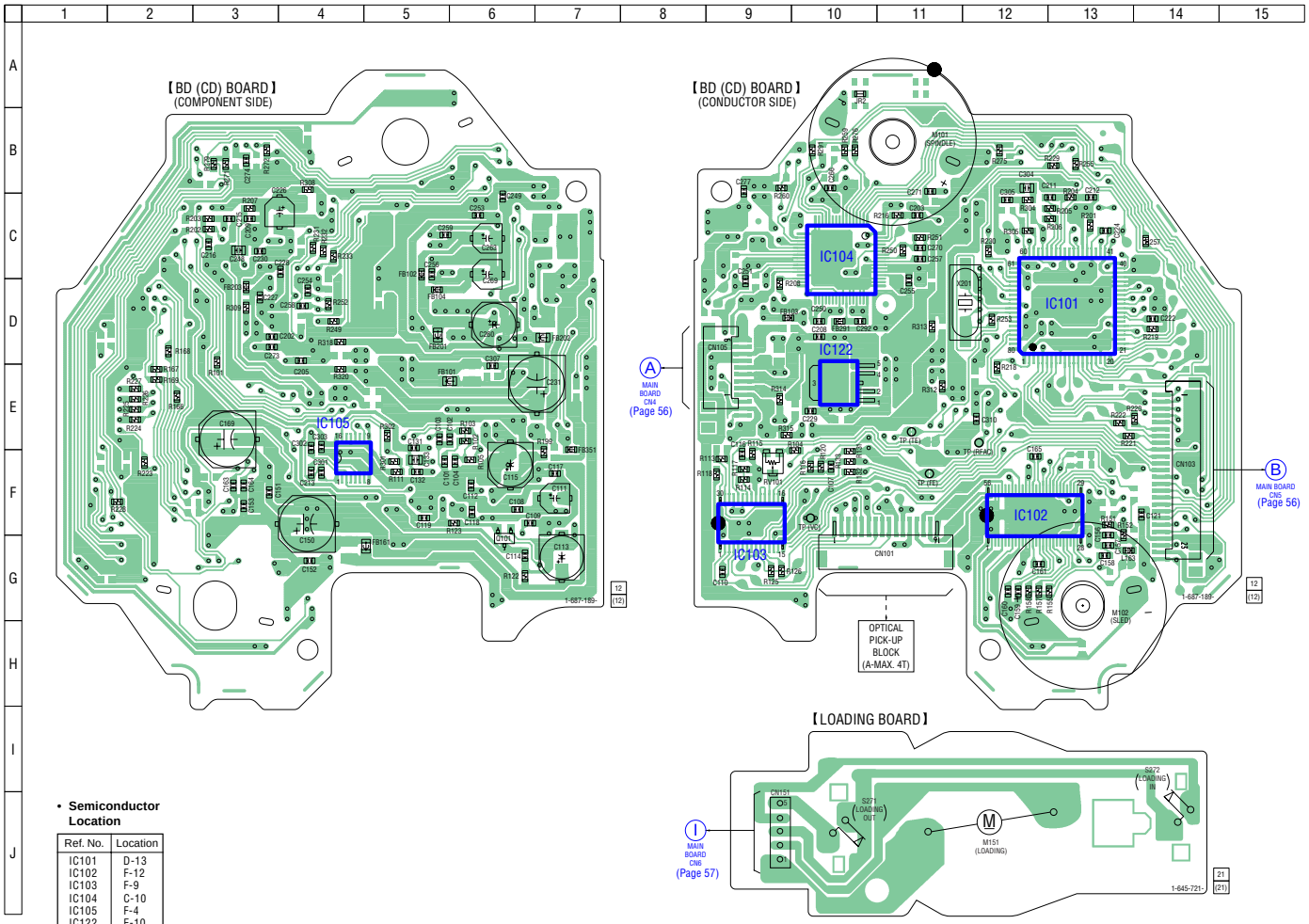

• **Semiconductor Location**

Ref. No.	Location
IC101	D-13
IC102	F-12
IC103	F-9
IC104	C-10
IC105	F-4
IC122	E-10
Q101	G-6

Downloaded from www.Manualslib.com manuals search engine

6-6. SCHEMATIC DIAGRAM – BD (CD) Section – • See page 55 for Waveforms. • See page 66 for IC Block Diagrams.

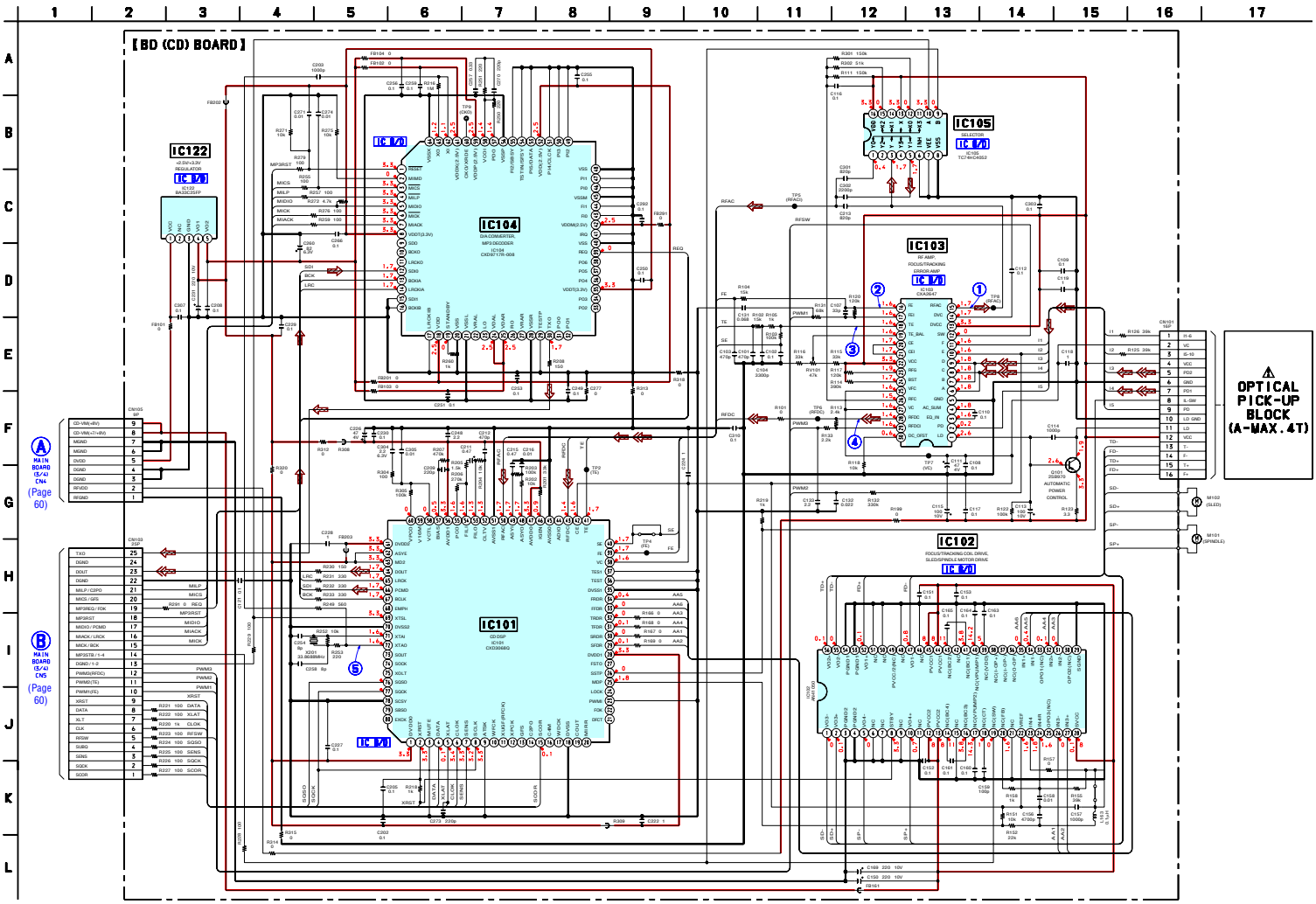

• Voltages and waveforms are dc with respect to ground under no-signal conditions.
no mark : CD PLAY

The components identified by mark ⚠ or dotted line with mark ⚠ are critical for safety.
Replace only with part number specified.

Downloaded from www.Manualslib.com manuals search engine

6-7. SCHEMATIC DIAGRAM – BD (MD) Board (1/2) –

• See page 55 for Waveforms. • See page 66 for IC Block Diagrams.

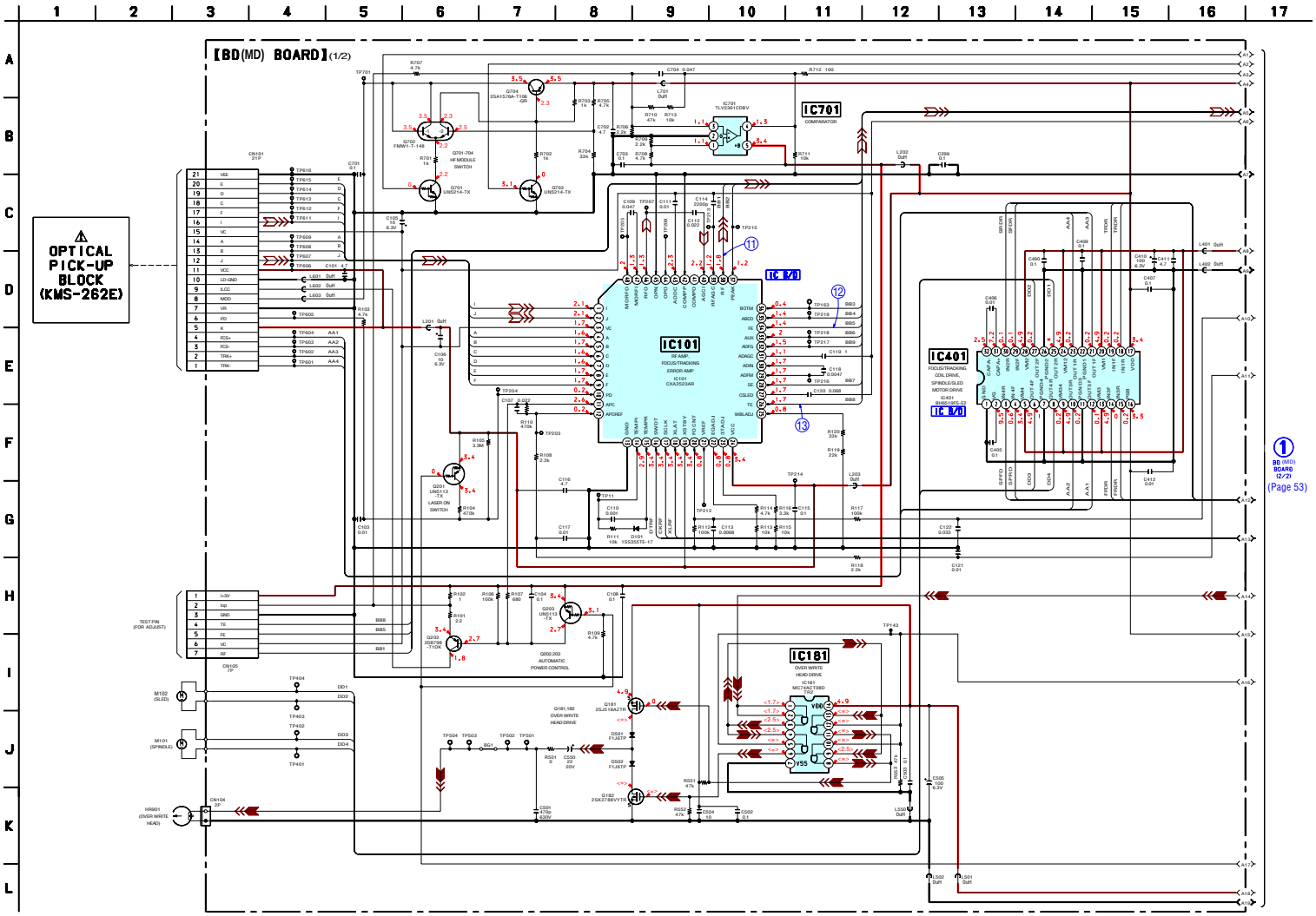

• Voltages and waveforms are dc with respect to ground under no-signal conditions.
no mark : MD PLAY { } : CD PLAY
< > : MD REC * : Impossible to measure

The components identified by mark ⚠ or dotted line with mark ⚠ are critical for safety.
Replace only with part number specified.

Downloaded from www.Manualslib.com manuals search engine

6-8. SCHEMATIC DIAGRAM – BD (MD) Board (2/2) –

• See page 55 for Waveforms. • See page 66 for IC Block Diagrams.

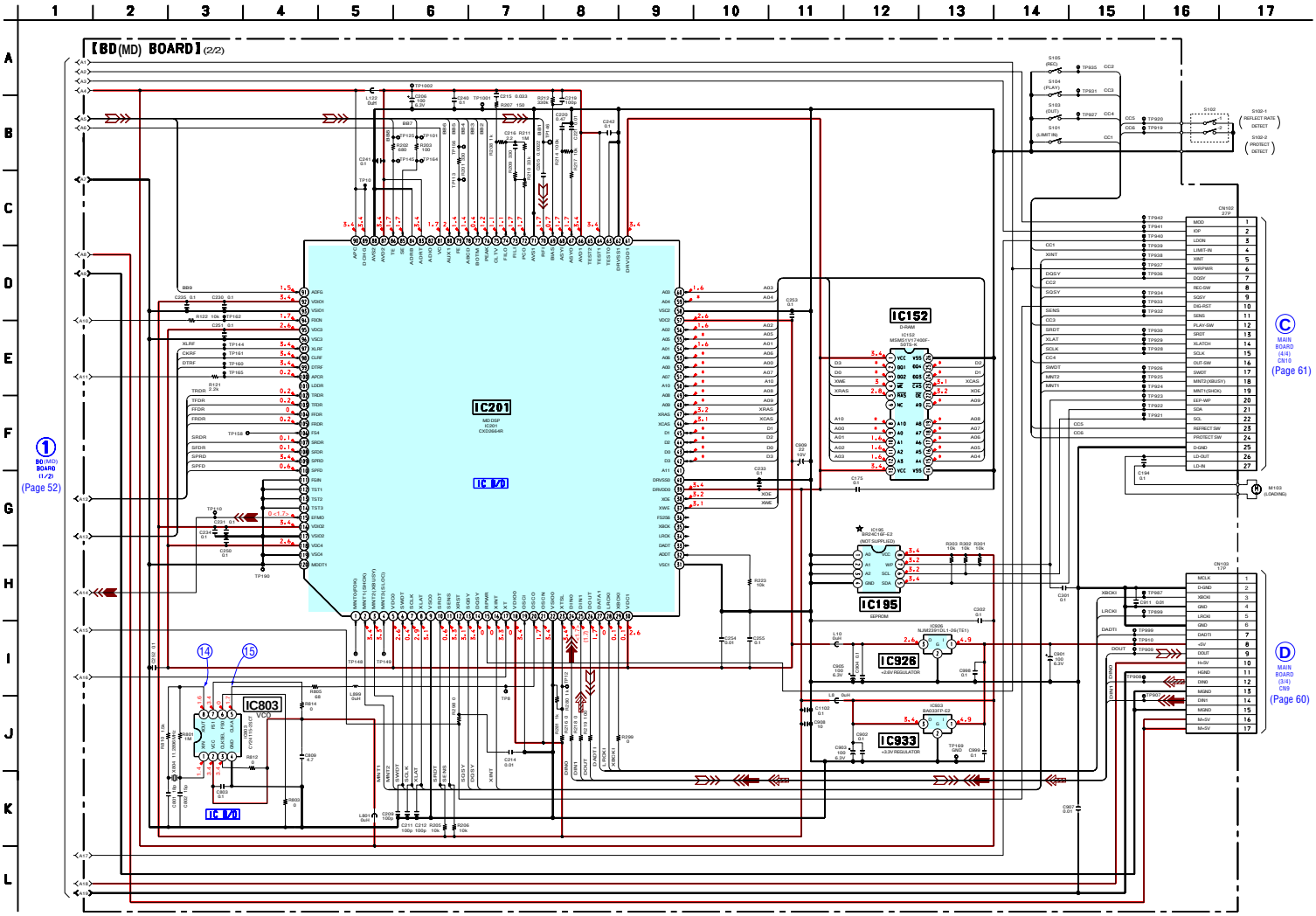

• Voltages and waveforms are dc with respect to ground under no-signal conditions.
no mark : MD PLAY { } : CD PLAY
< > : MD REC * : Impossible to measure

☆ IC195 is written in and settled EEPROM. Supply with a single article has not been carried out. In case you exchange by BD (MD) board (A-4727-928-A), please put on IC195 currently used with the model again.

Downloaded from www.Manualslib.com manuals search engine

6-9. PRINTED WIRING BOARD – BD (MD) Board –

• See page 49 for Circuit Boards Location. :Uses unleaded solder.

• **Semiconductor Location**

Ref. No.	Location
D101	G-5
D501	C-8
D502	B-8
IC101	F-9
IC152	D-8
IC181	B-9
IC195	B-11
IC201	D-10
IC401	E-11
IC701	E-9
IC803	C-3
IC926	D-12
IC933	C-12
Q181	C-8
Q182	C-8
Q201	E-6
Q202	F-8
Q203	E-9
Q701	E-5
Q702	E-5
Q703	E-5
Q704	E-5

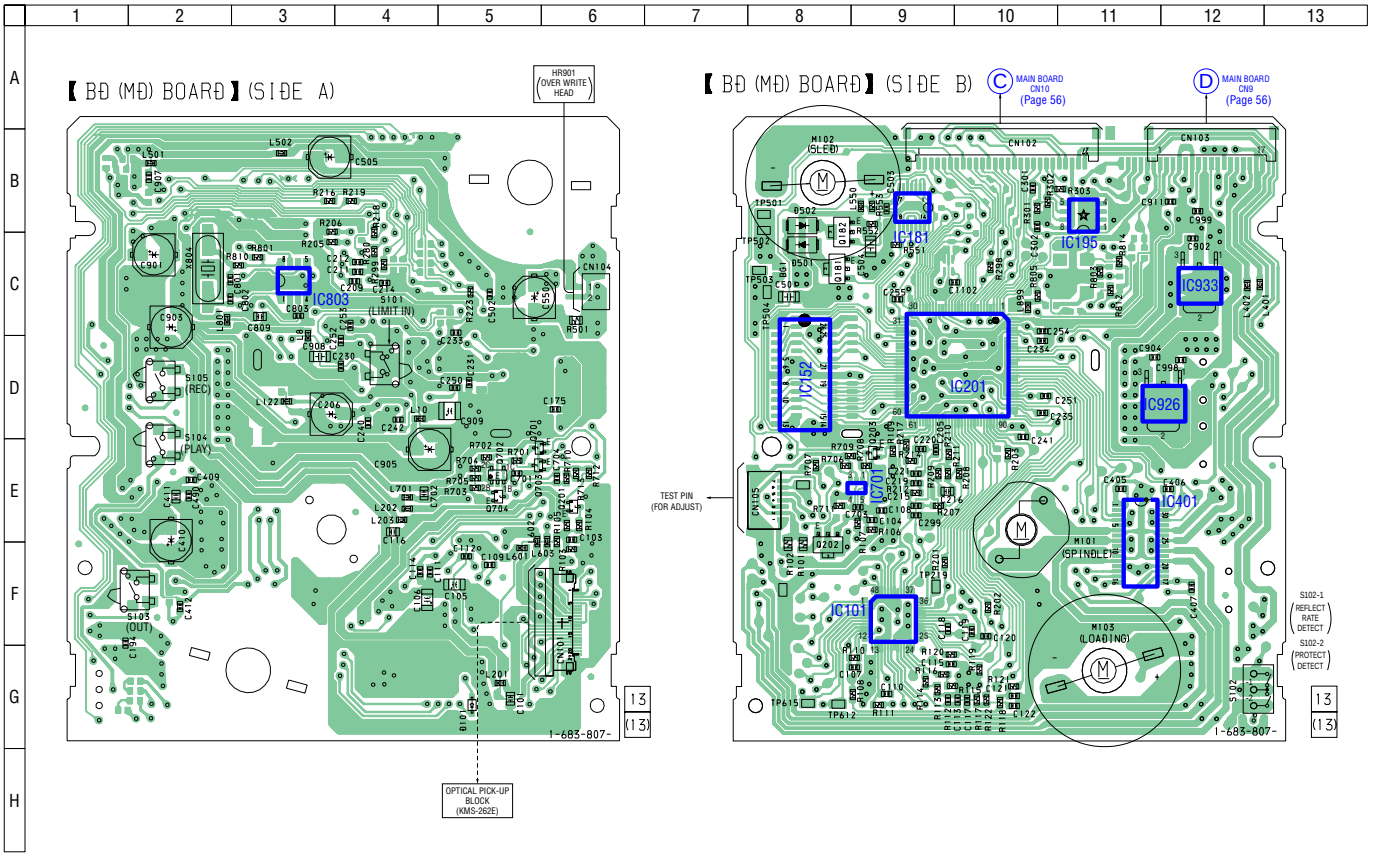

☆ IC195 is written in and settled EEPROM. Supply with a single article has not been carried out. In case you exchange by BD (MD) board (A-4727-928-A), please put on IC195 currently used with the model again.

Downloaded from www.Manualslib.com manuals search engine

• **Waveforms**

– BD (CD) Board –

❶ IC103 ⑲ (RFAC) (CD play mode)

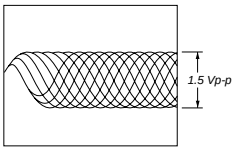

❷ IC103 ⑱ (FE) (CD playmode)

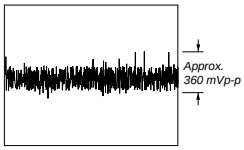

❸ IC103 ⑰ (TE) (CD play mode)

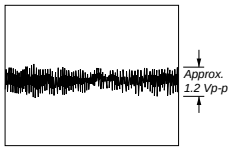

❹ IC103 ㉘ (RFDC) (CD play mode)

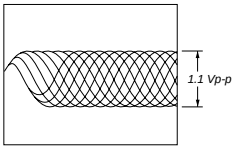

❺ IC101 ⑫ (XTAO)

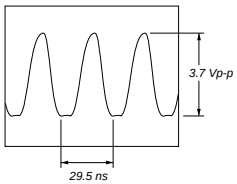

– BD (MD) Board –

⓫ IC101 ㊱ (RF) (MD play mode)

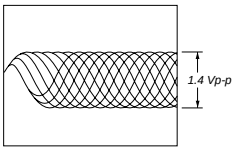

⓬ IC101 ㉞ (FE) (MD play mode)

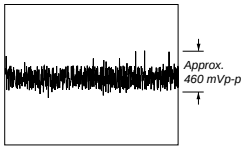

⓭ IC101 ㉙ (TE) (MD play mode)

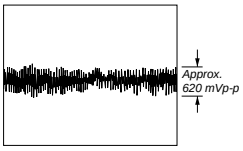

⓮ IC803 ⑥ (XOUT)

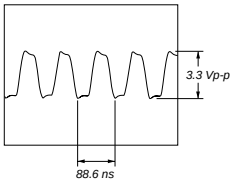

⓯ IC803 ⑤ (CLKA)

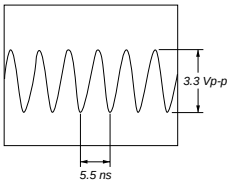

– MAIN Board –

㉑ IC6 ⑬ (XOUT)

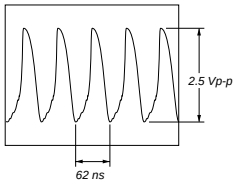

㉒ IC12 ⑪ (XOUT-T)

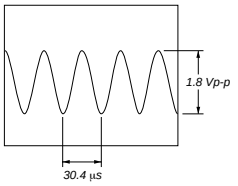

㉓ IC12 ⑬ (TE) (XOUT)

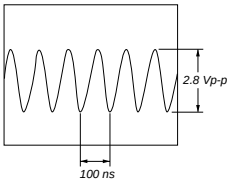

Downloaded from www.Manualslib.com manuals search engine

6-10. PRINTED WIRING BOARD – MAIN Board (Component Side) –

• See page 49 for Circuit Boards Location. :Uses unleaded solder.

• **Semiconductor Location**

Ref. No.	Location
D1	D-11
D2	E-11
D3	E-11
D4	D-11
D5	E-10
D25	I-12
D27	F-10
D28	F-10
D30	I-3
IC2	E-8
IC6	D-5
IC8	E-3
IC11	H-10
IC12	I-6
IC13	I-13
IC16	J-13
IC17	G-14
IC19	I-8
Q2	E-11
Q3	E-11
Q5	I-14
Q6	H-14

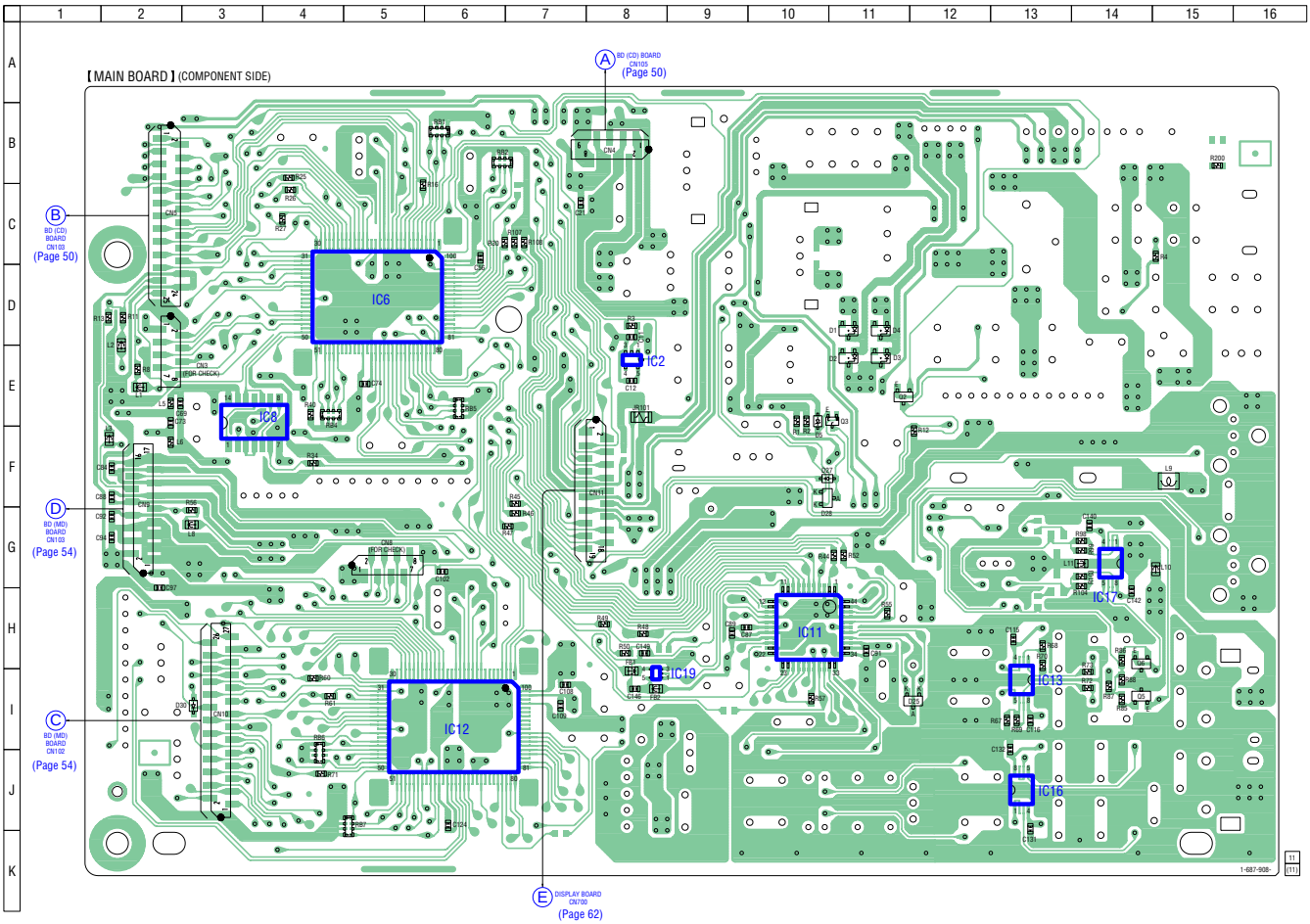

Downloaded from www.Manualslib.com manuals search engine

6-11. PRINTED WIRING BOARD – MAIN Board (Conductor Side) – • See page 49 for Circuit Boards Location. :Uses unleaded solder.

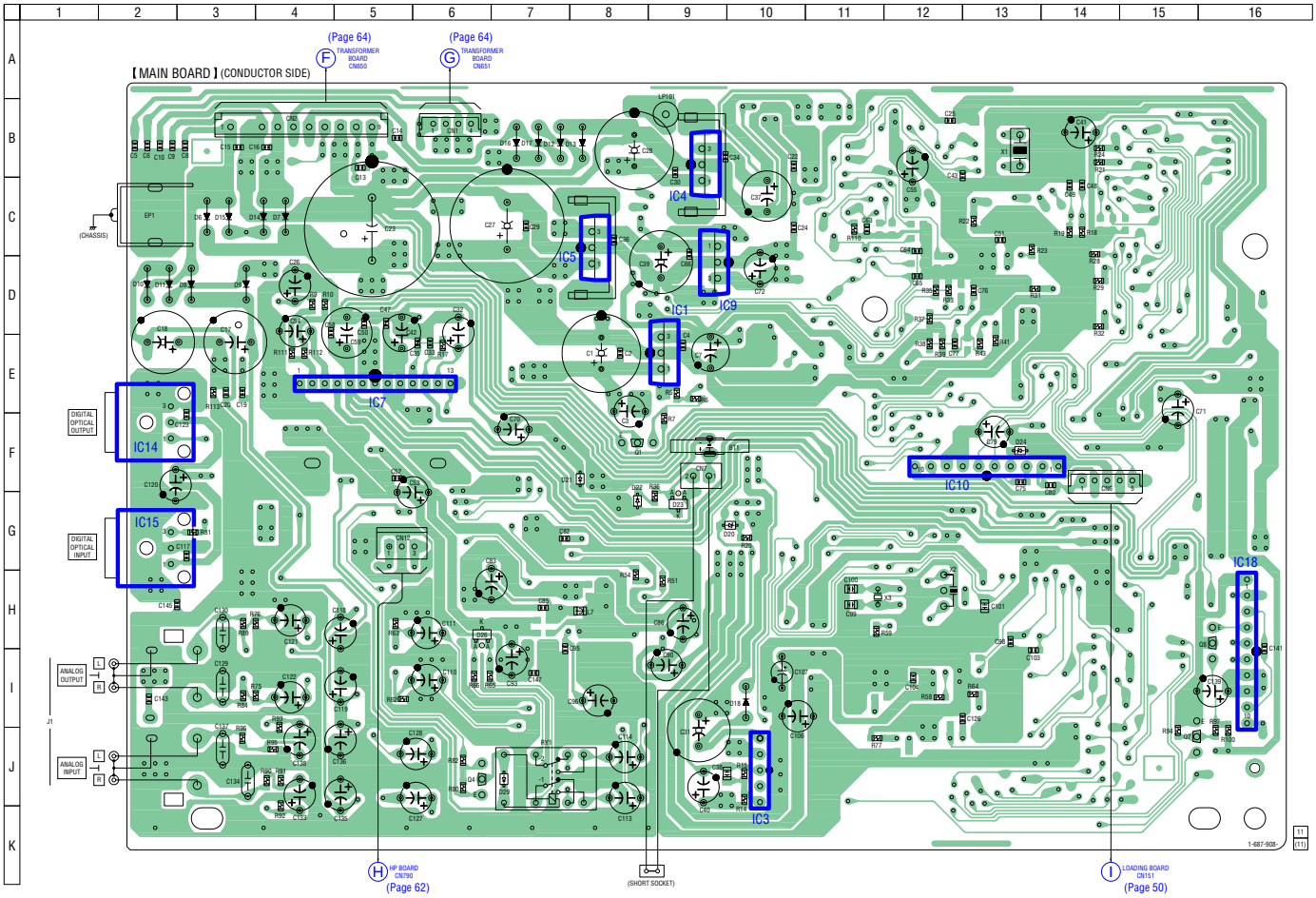

• **Semiconductor Location**

Ref. No.	Location
D6	C-3
D7	C-4
D8	D-3
D9	D-3
D10	D-2
D11	D-2
D12	B-7
D13	B-8
D14	C-4
D15	C-3
D16	B-7
D17	B-7
D18	I-10
D20	G-10
D21	F-8
D22	G-8
D23	G-8
D24	F-13
D26	H-6
D29	J-7
IC1	E-9
IC3	J-10
IC4	B-9
IC5	C-8
IC7	E-5
IC9	D-9
IC10	F-13
IC14	F-2
IC15	G-2
IC18	I-16
Q1	F-8
Q4	J-6
Q7	J-15
Q8	H-16

Downloaded from www.Manualslib.com manuals search engine

6-12. SCHEMATIC DIAGRAM – MAIN Board (1/4) – • See page 66 for IC Block Diagrams.

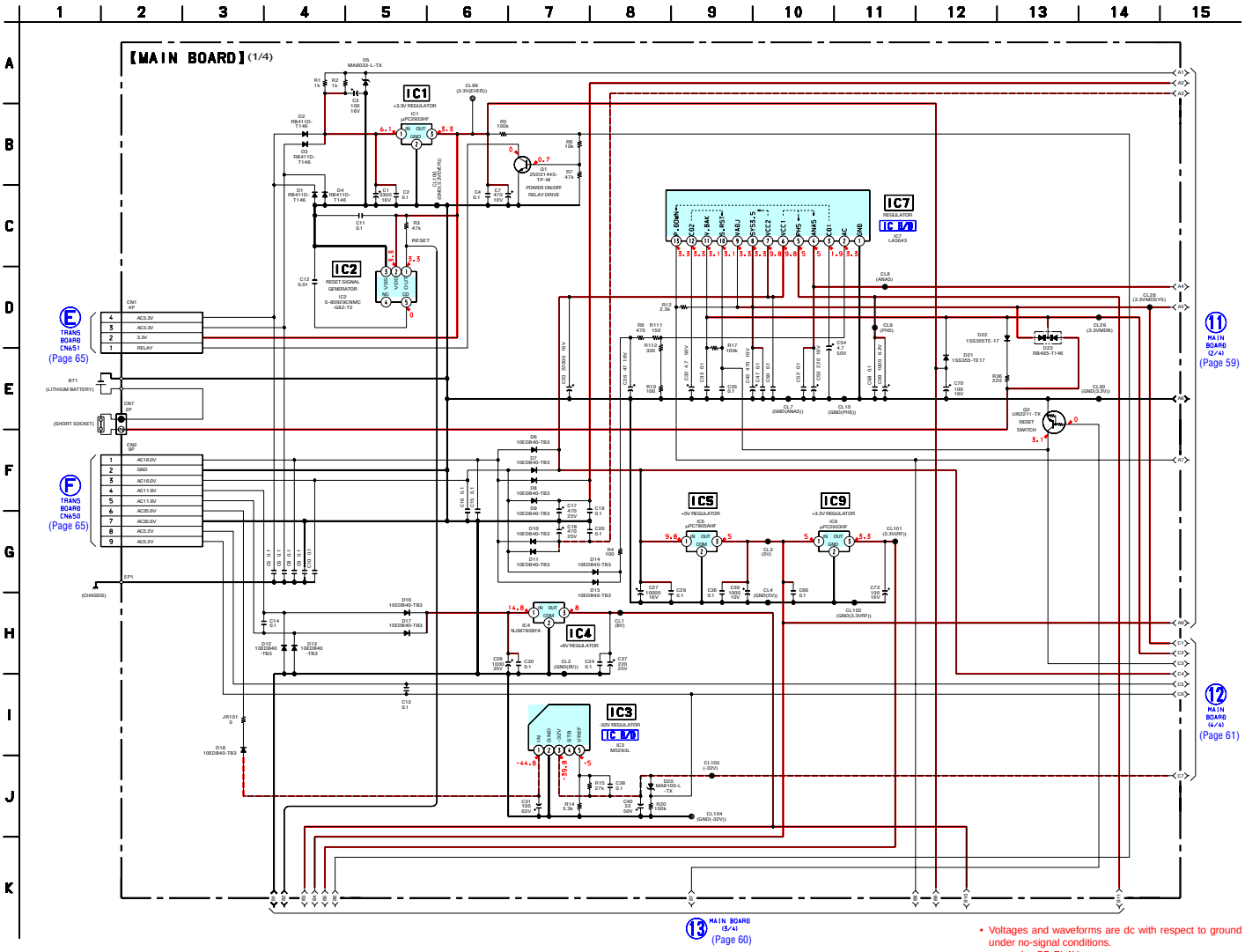

• Voltages and waveforms are dc with respect to ground under no-signal conditions.
no mark : CD PLAY

Downloaded from www.Manualslib.com manuals search engine

6-13. SCHEMATIC DIAGRAM – MAIN Board (2/4) – • See page 66 for IC Block Diagrams.

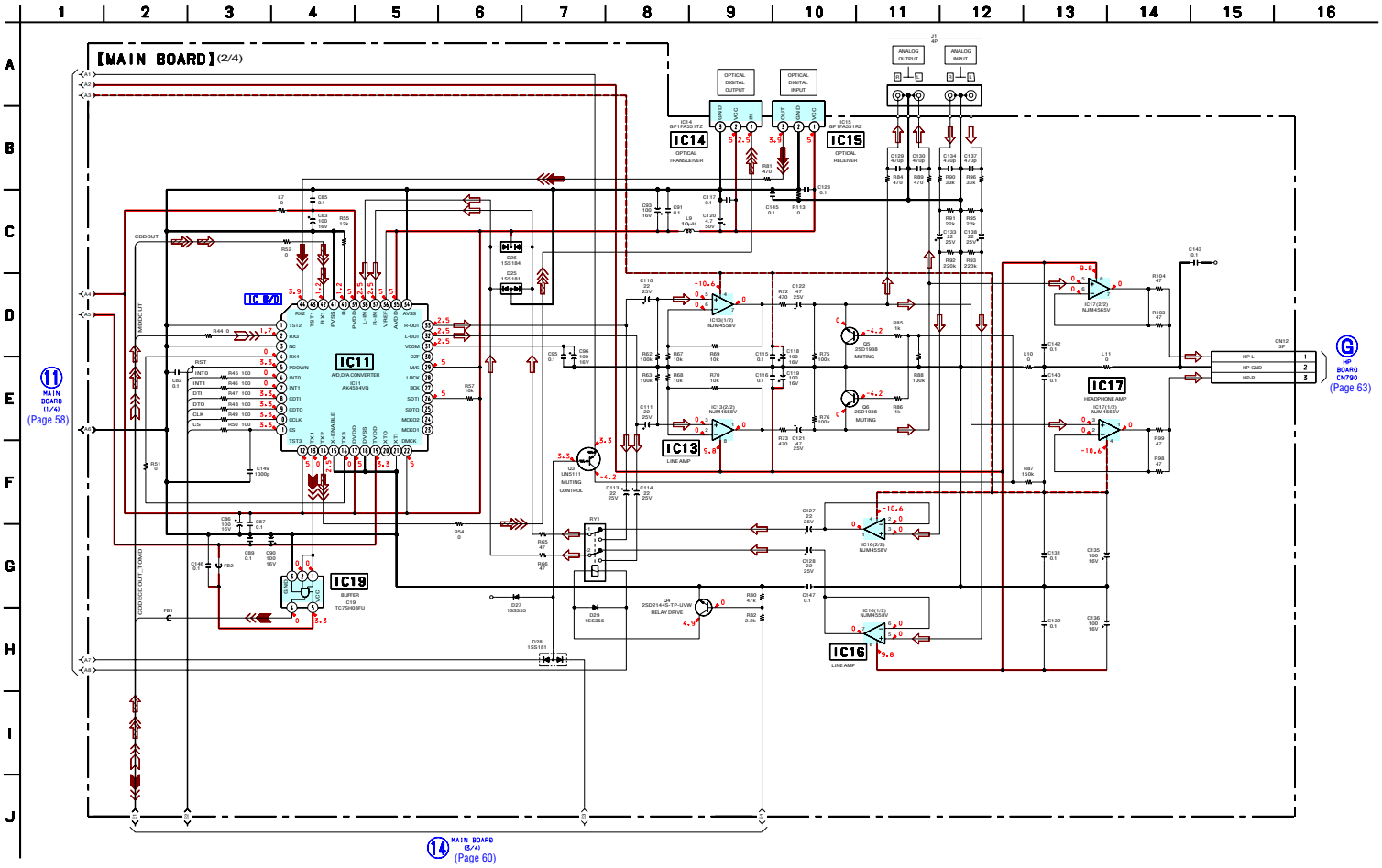

• Voltages and waveforms are dc with respect to ground under no-signal conditions.
no mark : CD PLAY

Downloaded from www.Manualslib.com manuals search engine

6-14. SCHEMATIC DIAGRAM – MAIN(3/4)/LOADING Boards – • See page 55 for Waveform. • See page 66 for IC Block Diagram.

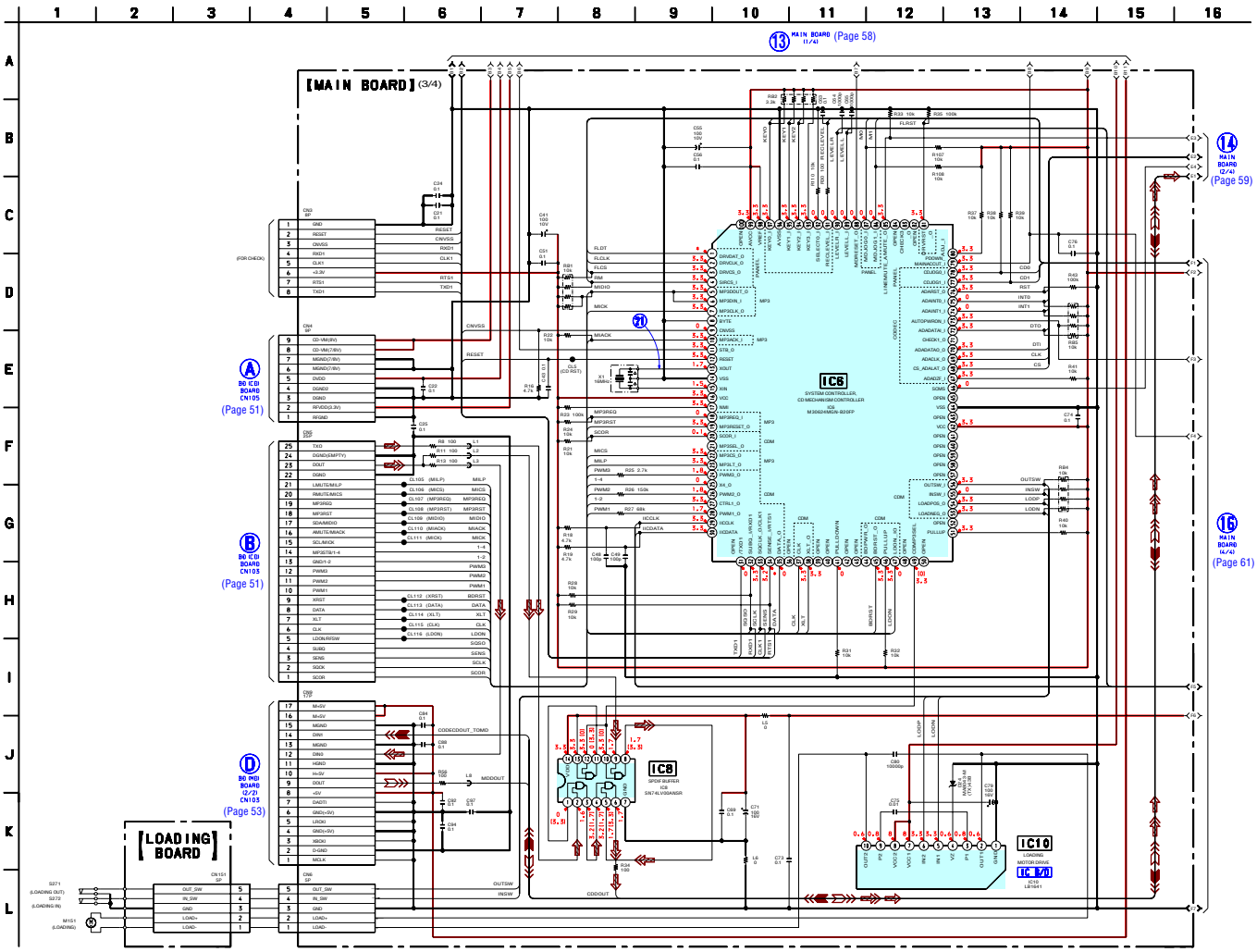

• Voltages and waveforms are dc with respect to ground under no-signal (detuned) conditions.
no mark : CD PLAY
[ ] : MP3 PLAY
* : Impossible to measure

Downloaded from www.Manualslib.com manuals search engine

6-15. SCHEMATIC DIAGRAM – MAIN Board (4/4) – • See page 55 for Waveforms. • See page 66 for IC Block Diagram.

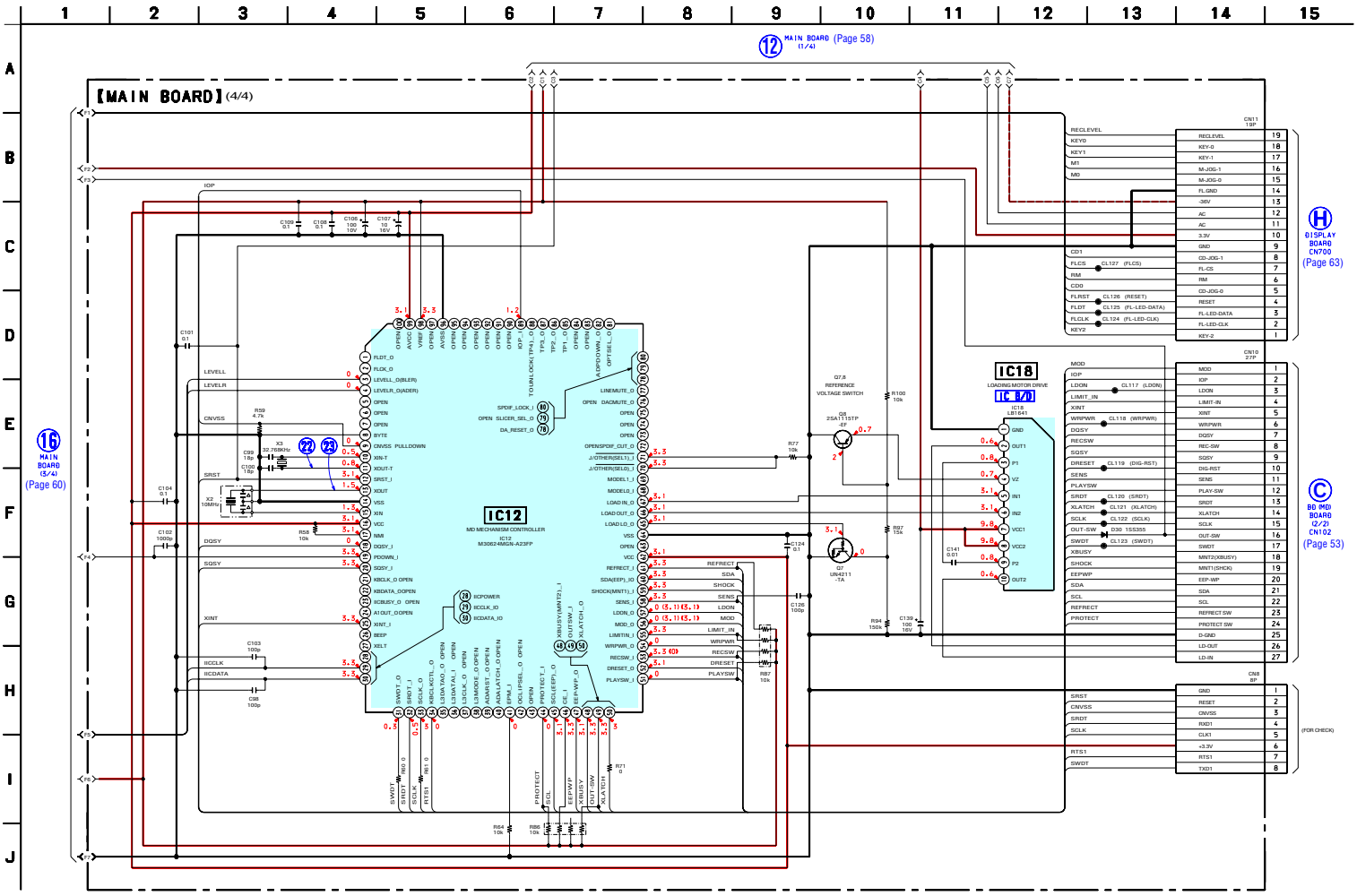

• Voltages and waveforms are dc with respect to ground under no-signal (detuned) conditions.
no mark : CD PLAY
( ) : MD PLAY
⟨⟨ ⟩⟩ : MD REC

Downloaded from www.Manualslib.com manuals search engine

6-16. PRINTED WIRING BOARDS – PANEL Section – • See page 49 for Circuit Boards Location. **:Uses unleaded solder.**

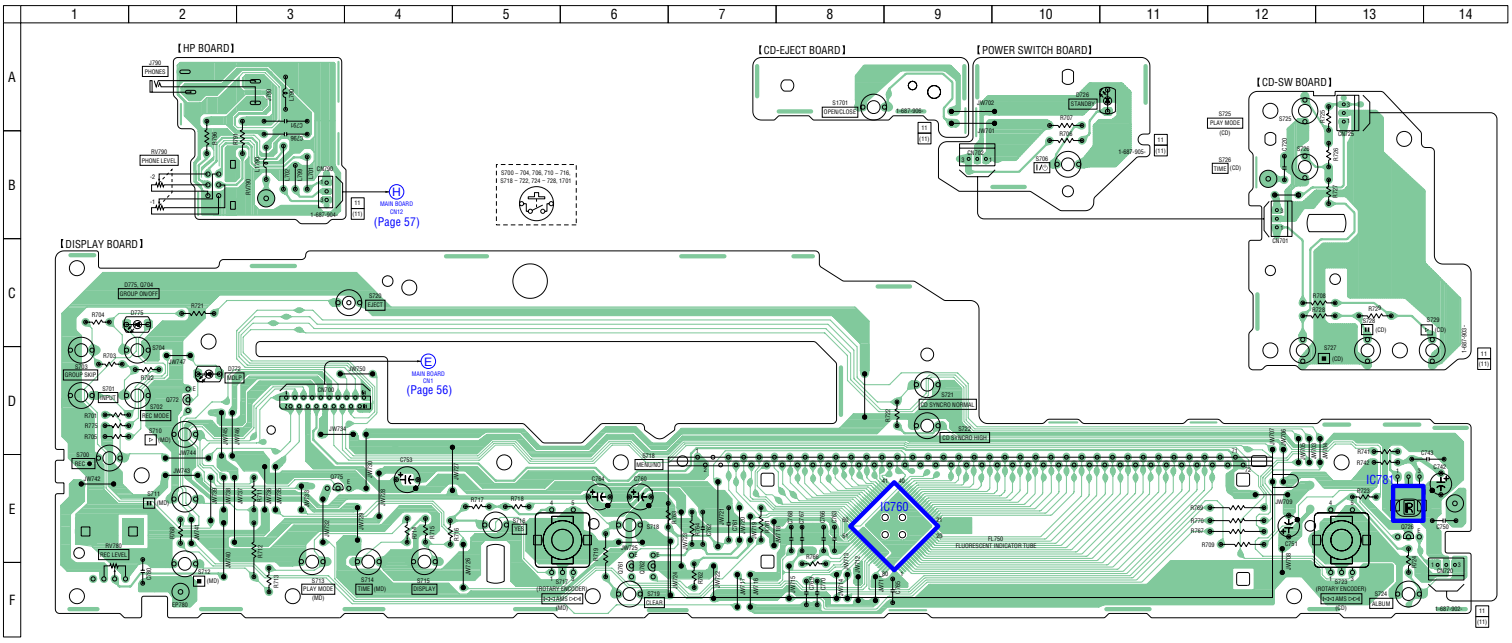

• **Semiconductor Location**

Ref. No.	Location
D726	A-11
D772	D-2
D775	C-2
IC760	E-9
IC781	E-13
Q726	E-13
Q761	F-6
Q762	F-6
Q772	D-2
Q775	E-3

Downloaded from www.Manualslib.com manuals search engine

6-17. SCHEMATIC DIAGRAM – PANEL Section –

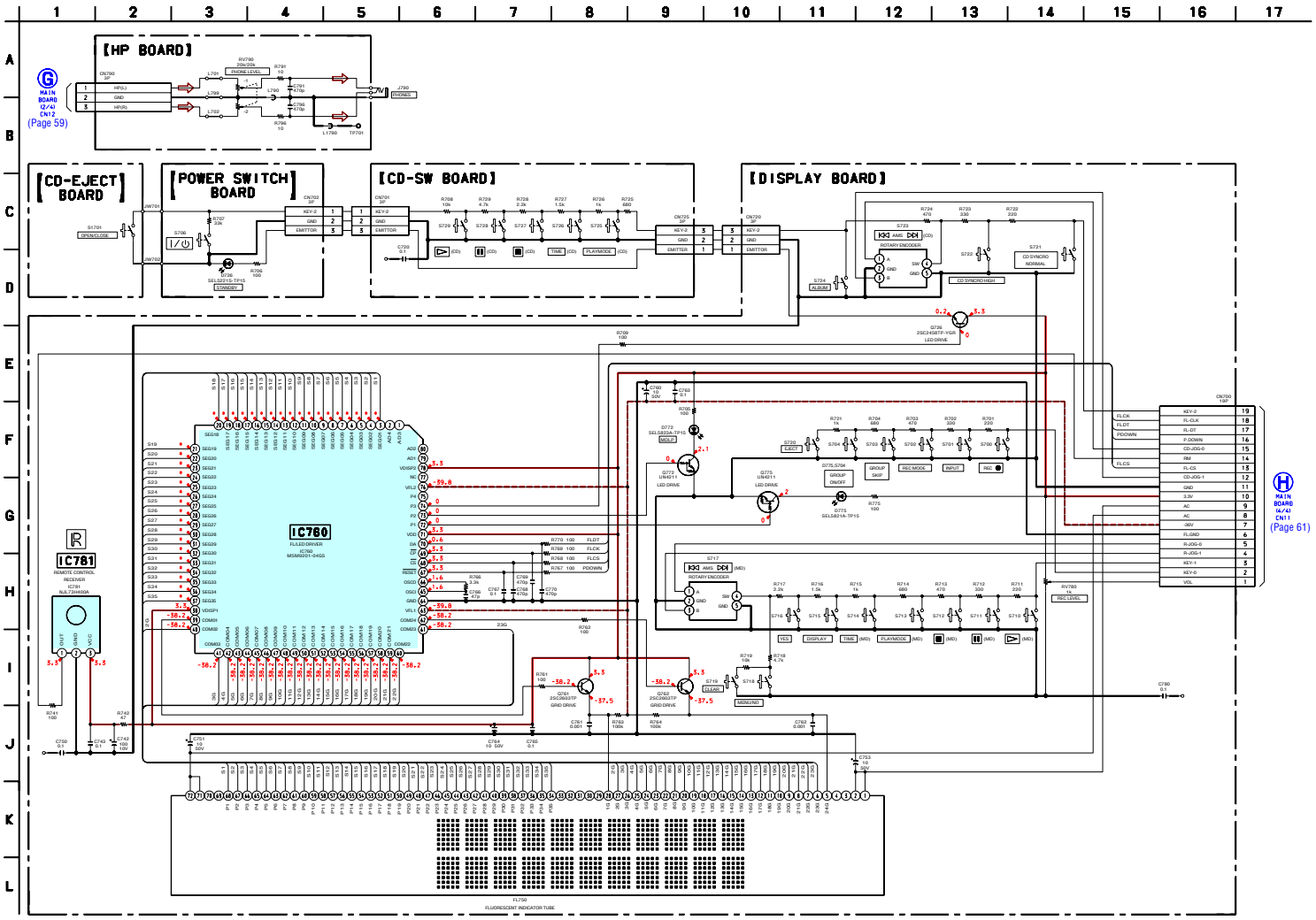

• Voltages and waveforms are dc with respect to ground under no-signal conditions.
no mark : CD PLAY

Downloaded from www.Manualslib.com manuals search engine

6-18. PRINTED WIRING BOARD – TRANSFORMER Board – • See page 49 for Circuit Boards Location. **:Uses unleaded solder.**

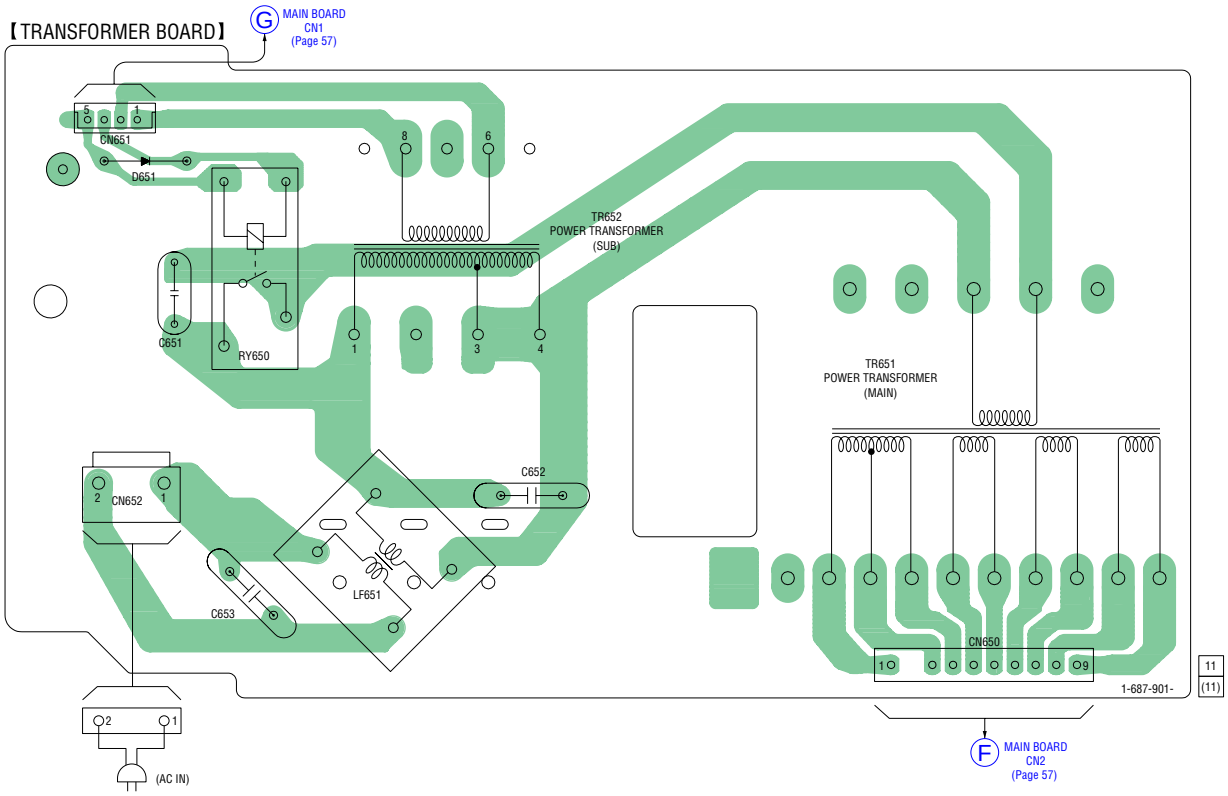

Downloaded from www.Manualslib.com manuals search engine

6-19. SCHEMATIC DIAGRAM – TRANSFORMER Board –

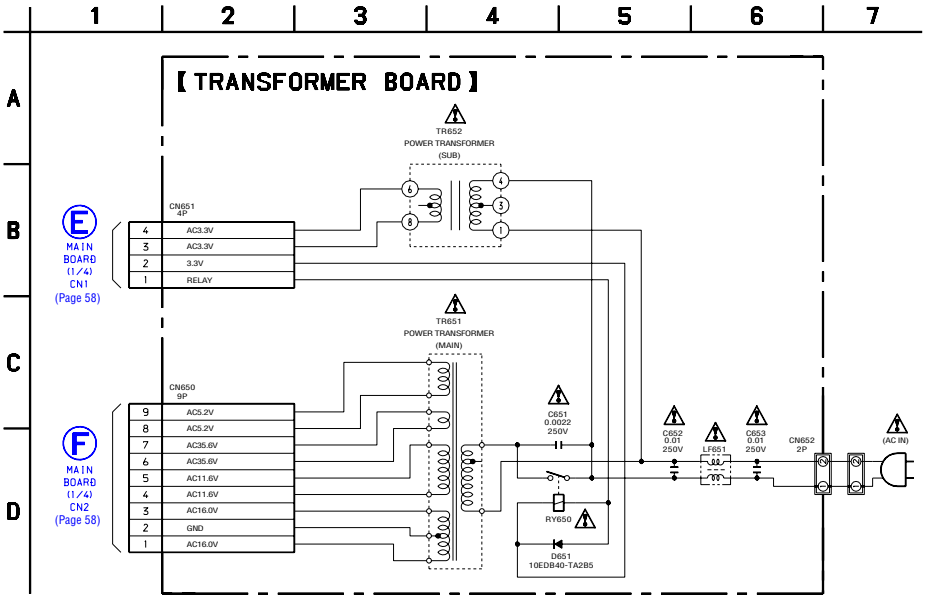

The components identified by mark ⚠ or dotted line with mark ⚠ are critical for safety.
Replace only with part number specified.

Downloaded from www.Manualslib.com manuals search engine

MXD-D400

- **IC Block Diagrams**

– BD (CD) Board –

IC101 CXD3068Q

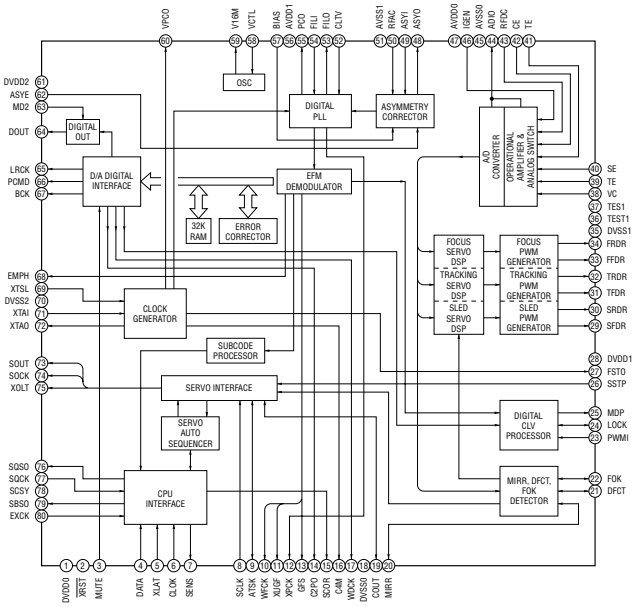

IC102 AN41050

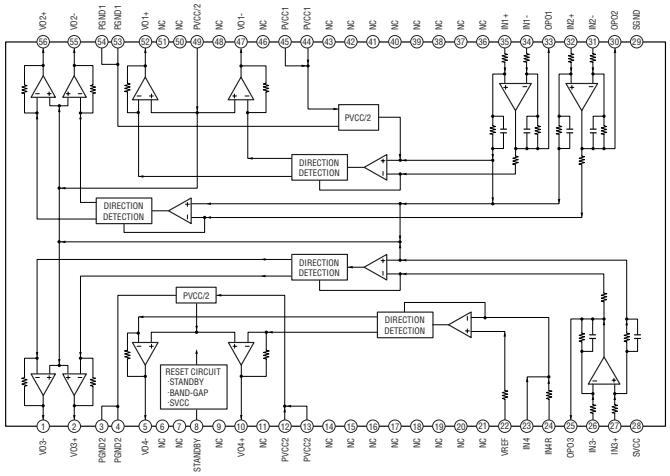

Downloaded from www.Manualslib.com manuals search engine

IC103 CXA2647N-T4

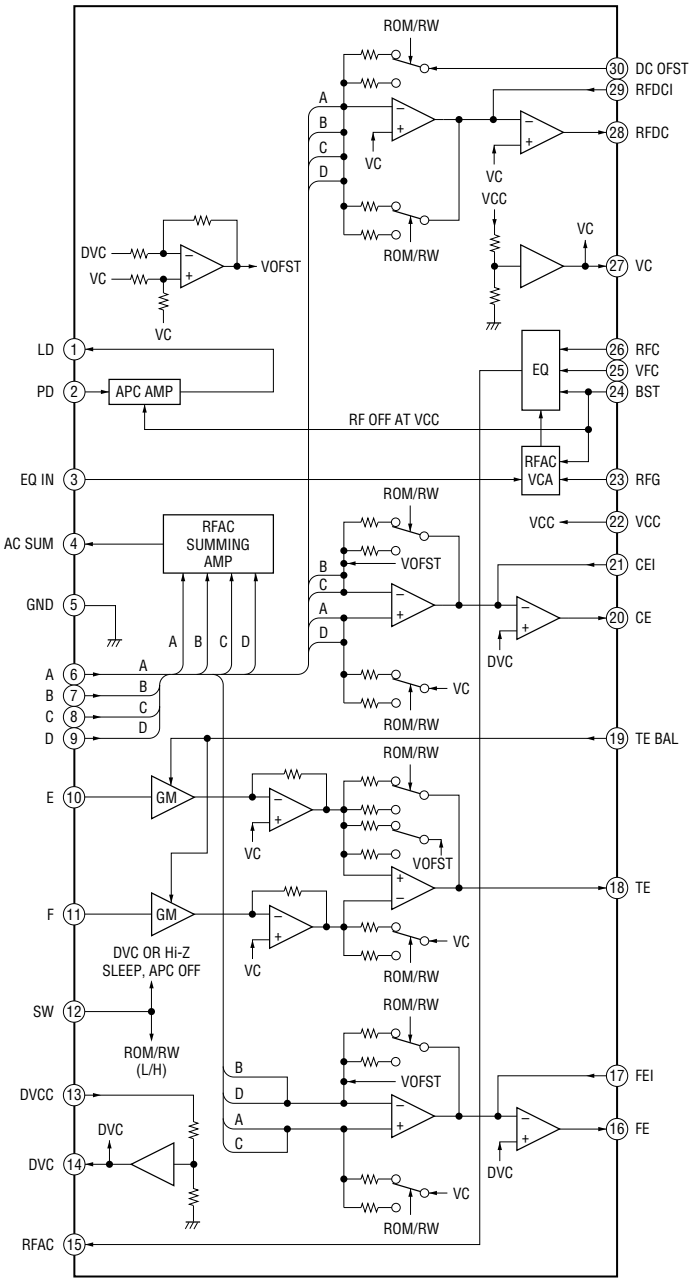

Downloaded from www.Manualslib.com manuals search engine

IC104 CXD9717R-008

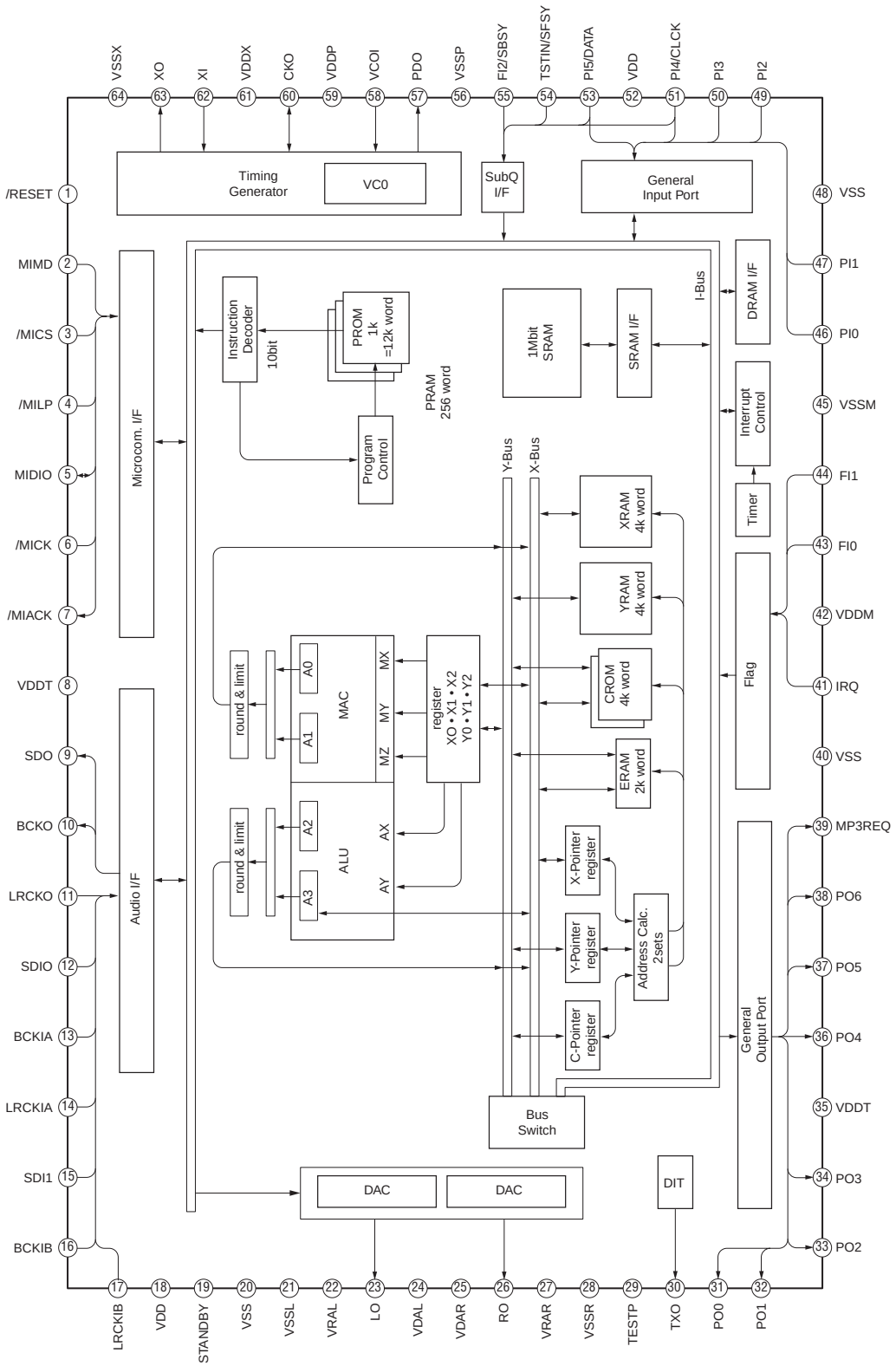

Downloaded from www.Manualslib.com manuals search engine

IC105 TC74HC4052AFT (EL)

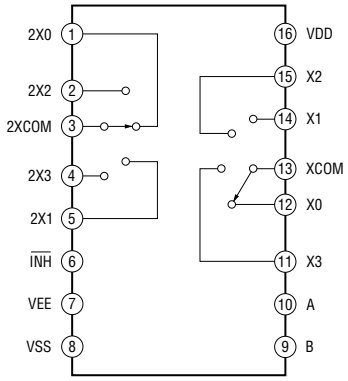

IC122 BA33C25FP-E2

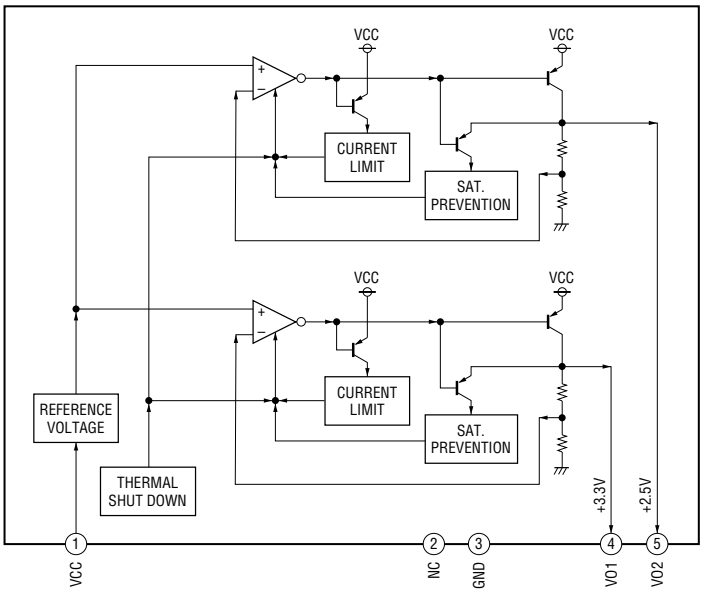

Downloaded from www.Manualslib.com manuals search engine

– BD (MD) Board –

IC101 CXA2523AR

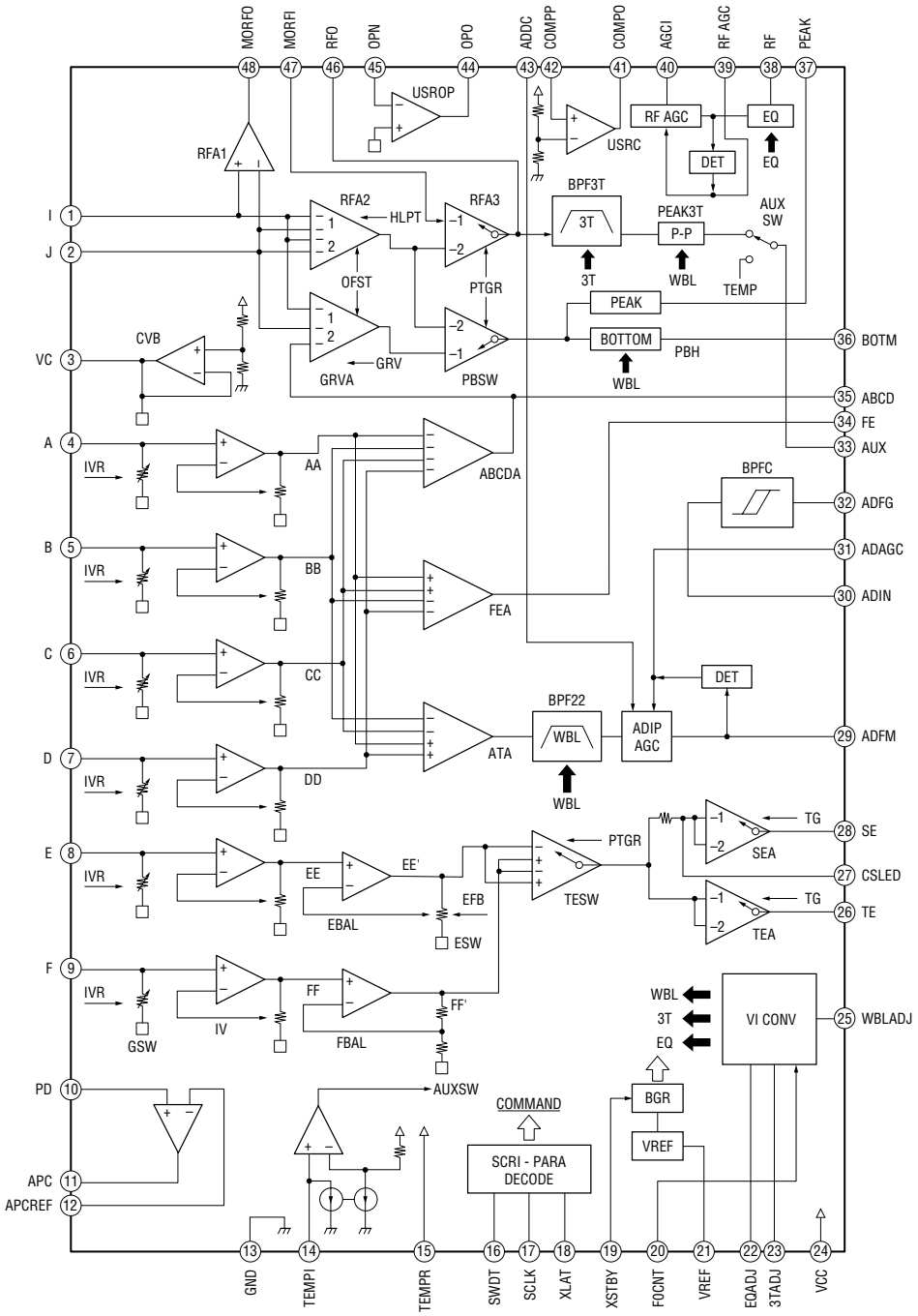

Downloaded from www.Manualslib.com manuals search engine

IC201 CXD2664R

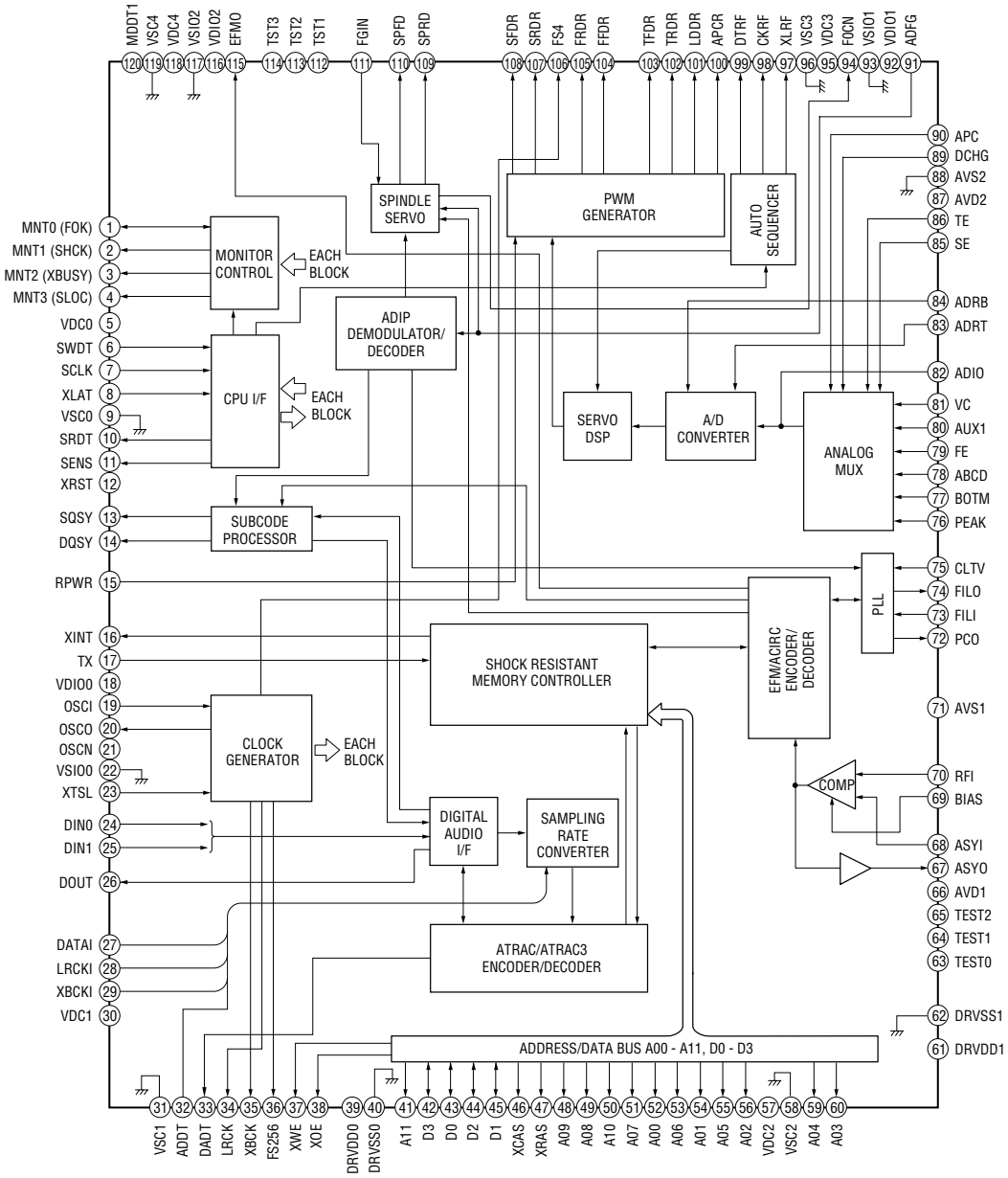

Downloaded from www.Manualslib.com manuals search engine

IC401 BH6519FS-E2

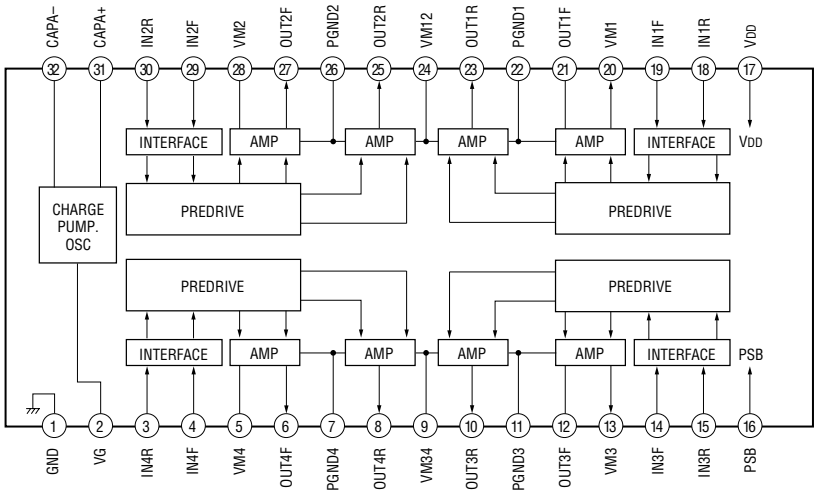

IC803 CY24115-2SCT

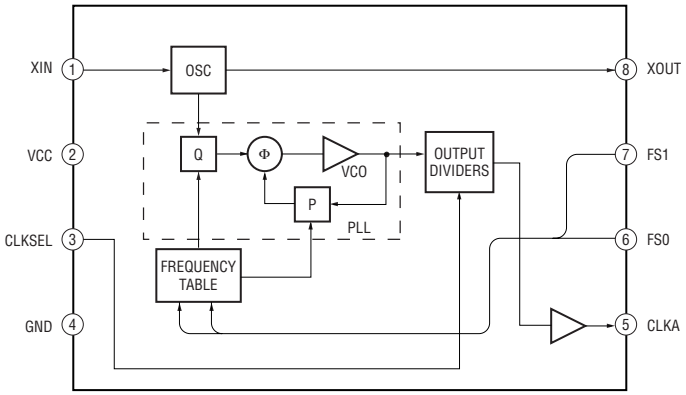

– MAIN Board –

IC3 M5293L

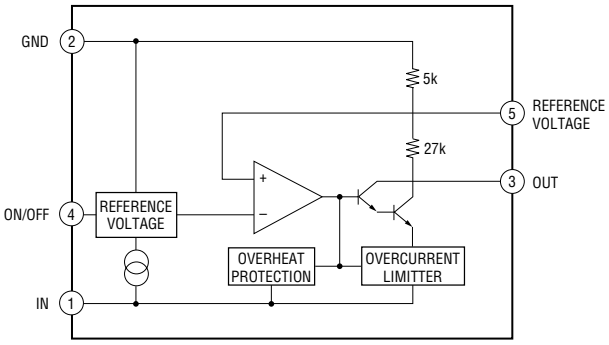

Downloaded from www.Manualslib.com manuals search engine

IC7 LA5643

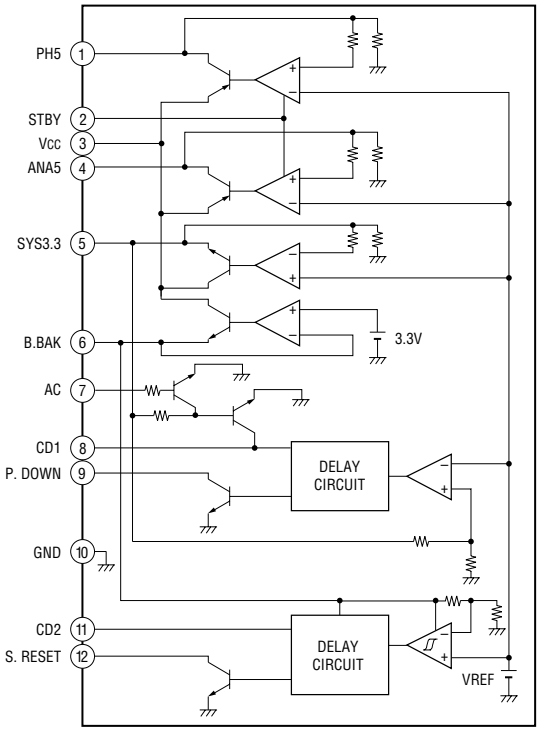

IC10, 18 LB1641

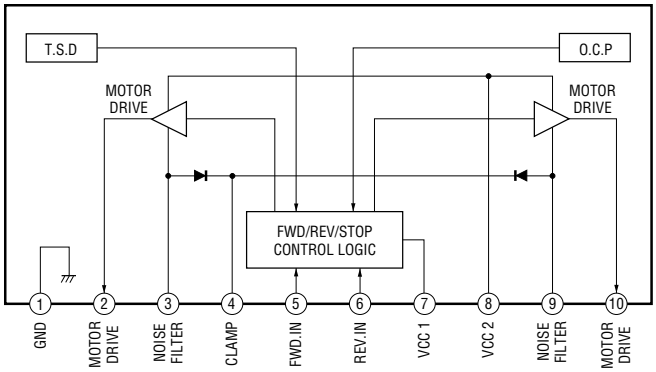

IC11 CXD9692R

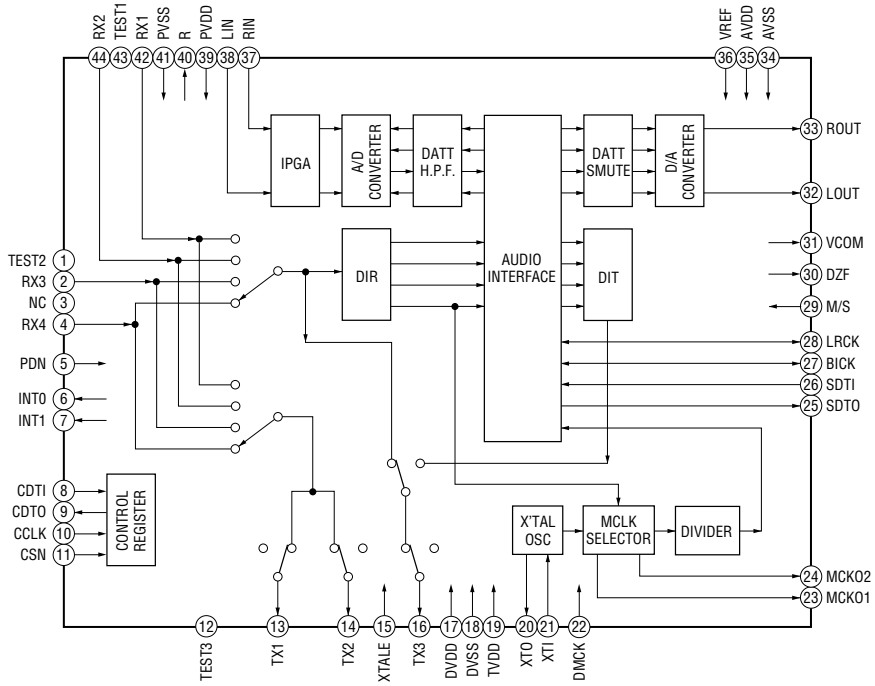

Downloaded from www.Manualslib.com manuals search engine

6-20. IC PIN FUNCTION DESCRIPTION

• BD (CD) BOARD IC101 CXD3068Q (CD DSP)

Pin No.	Pin Name	I/O	Description
1	DVDD0	—	Power supply terminal (+3.3V) (digital system)
2	XRST	I	Reset signal input from the CD mechanism controller "L": reset
3	MUTE	I	Muting on/off control signal input terminal "H": muting on Not used
4	DATA	I	Serial data input from the CD mechanism controller
5	XLAT	I	Serial data latch pulse signal input from the CD mechanism controller
6	CLOK	I	Serial data transfer clock signal input from the CD mechanism controller
7	SENS	O	Internal status (SENSE) signal output to the CD mechanism controller
8	SCLK	I	SENSE serial data reading clock signal input from the CD mechanism controller
9	ATSK	I/O	Input/output terminal for anti-shock Not used
10	WFCK	O	Write frame clock signal output terminal Not used
11	RFCK	O	RFCK signal output terminal Not used
12	XPCK	O	XPCK signal output terminal Not used
13	GFS	O	Guard frame sync signal output terminal Not used
14	C2PO	O	C2 pointer signal output terminal Not used
15	SCOR	O	Subcode sync (S0+S1) detection signal output to the CD mechanism controller
16	C4M	O	4.2336 MHz clock signal output terminal Not used
17	WDCK	O	Guard subcode sync (S0+S1) detection signal output terminal Not used
18	DVSS0	—	Ground terminal (digital system)
19	COUT	O	Numbers of track counted signal output terminal Not used
20	MIRR	O	Mirror signal output terminal Not used
21	DFCT	I/O	Defect signal input/output terminal Not used
22	FOK	O	Focus OK signal output terminal Not used
23	PWMI	I	Spindle motor external control signal input terminal Not used
24	LOCK	O	GFS is sampled by 460 Hz "H" output when GFS is "H" Not used
25	MDP	O	Spindle motor servo drive signal output to the motor/coil drive
26	SSTP	I	Detection signal input from limit in switch The optical pick-up is inner position when "H"
27	FSTO	O	2/3 divider output terminal Not used
28	DVDD1	—	Power supply terminal (+3.3V) (digital system)
29	SFDR	O	Sled servo drive PWM signal (+) output terminal
30	SRDR	O	Sled servo drive PWM signal (–) output terminal
31	TFDR	O	Tracking servo drive PWM signal (+) output terminal
32	TRDR	O	Tracking servo drive PWM signal (–) output terminal
33	FFDR	O	Focus servo drive PWM signal (+) output terminal
34	FRDR	O	Focus servo drive PWM signal (–) output terminal
35	DVSS1	—	Ground terminal (digital system)
36	TEST	I	Input terminal for the test
37	TES1	I	Input terminal for the test
38	VC	I	Middle point voltage (+1.65V) input terminal
39	FE	I	Focus error signal input from the RF amplifier
40	SE	I	Sled error signal input from the RF amplifier
41	TE	I	Tracking error signal input from the RF amplifier
42	CE	I	Middle point servo analog signal input
43	RFDC	I	RF signal input from the RF amplifier
44	ADIO	O	Output terminal for the test Not used
45	AVSS0	—	Ground terminal (analog system)
46	IGEN	I	Stabilized current input for operational amplifiers

Downloaded from www.Manualslib.com manuals search engine

Pin No.	Pin Name	I/O	Description
47	AVDD0	—	Power supply terminal (+3.3V) (analog system)
48	ASYO	O	EFM full-swing output terminal
49	ASYI	I	Asymmetry comparator voltage input terminal
50	RFAC	I	EFM signal input from the RF amplifier
51	AVSS1	—	Ground terminal (analog system)
52	CLTV	I	Internal VCO control voltage input terminal
53	FILO	O	Filter output for master PLL
54	FILI	I	Filter input for master PLL
55	PCO	O	Charge pump output for master PLL
56	AVDD1	—	Power supply terminal (+3.3V) (analog system)
57	BIAS	I	Asymmetry circuit constant current input terminal
58	VCTL	I	VCO control voltage input terminal for the wideband EFM PLL Not used
59	V16M	O	VCO oscillation output terminal for the wideband EFM PLL Not used
60	VPCO	O	Charge pump output terminal for the wideband EFM PLL Not used
61	DVDD2	—	Power supply terminal (+3.3V) (digital system)
62	ASYE	I	Asymmetry circuit on/off control signal input terminal "L": off, "H": on Not used
63	MD2	I	Digital out on/off control signal input terminal "L": digital out off, "H": digital out on Fixed at "H" in this set
64	DOUT	O	Digital audio signal output terminal
65	LRCK	O	L/R sampling clock signal (44.1 kHz) output to the MP3 decoder
66	PCMD	O	Serial data output to the MP3 decoder
67	BCLK	O	Bit clock signal (2.8224 MHz) output to the MP3 decoder
68	EMPH	O	"L" is output when playback disc is emphasis off "H" is output when playback disc is emphasis on Not used
69	XTSL	I	Input terminal for the system clock frequency setting "L": 16.9344 MHz, "H": 33.8688MHz Fixed at "H" in this set
70	DVSS2	—	Ground terminal (digital system)
71	XTAI	I	System clock input terminal (33.8688 MHz)
72	XTAO	O	System clock output terminal (33.8688 MHz) Not used
73	SOUT	O	Serial data output terminal Not used
74	SOCK	O	Serial data reading clock signal output terminal Not used
75	XOLT	O	Serial data latch pulse signal output terminal Not used
76	SQSO	O	Subcode Q data output to the CD mechanism controller
77	SQCK	I	Subcode Q data reading clock signal input from the CD mechanism controller
78	SCSY	I	Input terminal for resynchronism of guard subcode sync (S0+S1) Not used
79	SBSO	O	Subcode serial data output terminal Not used
80	EXCK	I	Subcode serial data reading clock signal input terminal Not used

Downloaded from www.Manualslib.com manuals search engine

• **BD (MD) BOARD IC101 CXA2523AR (RF AMP, FOCUS/TRACKING ERROR AMP)**

Pin No.	Pin Name	I/O	Description
1	I	I	I-V converted RF signal I input from the optical pick-up block detector
2	J	I	I-V converted RF signal J input from the optical pick-up block detector
3	VC	O	Middle point voltage (+1.65V) generation output terminal
4 to 9	A to F	I	Signal input from the optical pick-up detector
10	PD	I	Light amount monitor input from the optical pick-up block laser diode
11	APC	O	Laser amplifier output terminal to the automatic power control circuit
12	APCREF	I	Reference voltage input terminal for setting laser power
13	GND	—	Ground terminal
14	TEMPI	I	Connected to the temperature sensor Not used
15	TEMPR	O	Output terminal for a temperature sensor reference voltage Not used
16	SWDT	I	Writing serial data input from the MD DSP
17	SCLK	I	Serial data transfer clock signal input from the MD DSP
18	XLAT	I	Serial data latch pulse signal input from the MD DSP
19	XSTBY	I	Standby signal input terminal "L": standby (fixed at "H" in this set)
20	F0CNT	I	Center frequency control voltage input terminal of internal circuit (BPF22, BPF3T, EQ) input terminal
21	VREF	O	Reference voltage output terminal Not used
22	EQADJ	I	Center frequency setting terminal for the internal circuit (EQ)
23	3TADJ	I	Center frequency setting terminal for the internal circuit (BPF3T)
24	VCC	—	Power supply terminal (+3.3V)
25	WBLADJ	I	Center frequency setting terminal for the internal circuit (BPF22)
26	TE	O	Tracking error signal output to the MD DSP
27	CSLED	I	Connected to the external capacitor for low-pass filter of the sled error signal
28	SE	O	Sled error signal output to the MD DSP
29	ADFM	O	FM signal output of the ADIP
30	ADIN	I	Receives a ADIP FM signal in AC coupling
31	ADAGC	I	Connected to the external capacitor for ADIP AGC
32	ADFG	O	ADIP duplex signal (22.05 kHz ± 1 kHz) output to the MD DSP
33	AUX	O	Auxiliary signal (I3 signal/temperature signal) output to the MD DSP
34	FE	O	Focus error signal output to the MD DSP
35	ABCD	O	Light amount signal (ABCD) output to the MD DSP
36	BOTM	O	Light amount signal (RF/ABCD) bottom hold output to the MD DSP
37	PEAK	O	Light amount signal (RF/ABCD) peak hold output to the MD DSP
38	RF	O	Playback EFM RF signal output to the MD DSP
39	RFAGC	I	Connected to the external capacitor for RF auto gain control circuit
40	AGCI	I	Receives a RF signal in AC coupling
41	COMPO	O	User comparator output terminal Not used
42	COMPP	I	User comparator input terminal Not used
43	ADDC	I	Connected to the external capacitor for cutting the low band of the ADIP amplifier
44	OPO	O	User operational amplifier output terminal Not used
45	OPN	I	User operational amplifier inversion input terminal Not used
46	RFO	O	RF signal output terminal
47	MORFI	I	Receives a MO RF signal in AC coupling
48	MORFO	O	MO RF signal output terminal

Downloaded from www.Manualslib.com manuals search engine

• **MAIN BOARD IC6 M30624MGA-B20FP (SYSTEM CONTROLLER, CD MECHANISM CONTROLLER)**

Pin No.	Pin Name	I/O	Description
1	DRVDAT	O	Command data output to the FL/LED driver
2	DRVCLK	O	Command data transfer clock signal output to the FL/LED driver
3	DRVCS	O	Command data transfer request signal output to the FL/LED driver
4	SIRCS	I	Remote control signal input from the remote control receiver
5	MP3DOUT	O	Command data output to the MP3 decoder
6	MP3DIN	I	Command data input from the MP3 decoder
7	MP3CLK	O	Command data transfer clock signal output to the MP3 decoder
8	BYTE	I	External data bus line byte selection signal input terminal “L”: 16 bit, “H”: 8 bit (fixed at “L”)
9	CNVSS	—	Ground terminal
10	MP3ACK	O	Acknowledge signal output to the MP3 decoder
11	STB	O	Power on/off relay drive signal output terminal “L”: standby, “H”: power on
12	RESET	I	System reset signal input from the reset signal generator “L”: reset For several hundreds msec. after the power supply rises, “L” is input, then it changes to “H”
13	X-OUT	O	System clock output terminal (16 MHz)
14	VSS	—	Ground terminal
15	X-IN	I	System clock input terminal (16 MHz)
16	VCC	—	Power supply terminal (+5V)
17	NMI	I	Non-maskable interrupt input terminal “L” active (fixed at “H” in this set)
18	MP3REQ	I	Command data request signal input from the MP3 decoder
19	MP3RESET	O	System reset signal output to the MP3 decoder
20	SCOR	I	Subcode sync (S0+S1) detection signal input from the CD DSP “H”: active
21	MP3SEL	I	Command selection signal output terminal Not used
22	MP3CS	O	Chip enable signal output to the MP3 decoder
23	MP3LP	O	Latch pulse signal output to the MP3 decoder
24	PWM3	O	PWM signal output for RF offset adjustment
25	X4	O	Disc speed selection (normal/4 speed) signal output to the selector IC
26	PWM2	O	PWM signal output for tracking offset adjustment
27	CTRL1	O	Disc speed selection (normal/2 speed) signal output to the selector IC
28	PWM1	O	PWM signal output for focus offset adjustment
29	IICCLK	I/O	IIC data transfer clock signal output to the MD mechanism controller
30	IICDATA	I/O	IIC data bus with the MD mechanism controller
31	TXD1	O	Not used
32	SUBQ	I	Subcode Q data input from the CD DSP
33	SQCLK	O	Subcode Q data reading clock signal output to the CD block “L”: active
34	SENSE	I	Internal status (SENSE) input from the CD DSP
35	DATA	O	Command serial data output to the CD DSP
36	OPEN	—	Not used
37	CLK	O	Command serial data transfer clock signal output to the CD DSP
38	XLT	O	Command latch pulse output to the CD DSP
39, 40	OPEN	—	Not used
41	PULLDOWN	I	Fixed at “L” in this set
42, 43	OPEN	—	Not used
44	BDPWR	O	power control signal output terminal Not used
45	BDRST	O	System reset signal output to the RF amplifier and CD DSP
46	PULLUP	I	Fixed at “H” in this set

Downloaded from www.Manualslib.com manuals search engine

Pin No.	Pin Name	I/O	Description
47	LDON	O	Laser diode on/off control signal output to the automatic power control circuit "H": laser on
48	OPEN	—	Not used
49	CDMP3SEL	O	CD/MP3 select signal output terminal
50	OPEN	—	Not used
51	PULLUP	I	Fixed at "H" in this set
52	OPEN	—	Not used
53	LOAD_NEG	O	CD loading motor drive signal output (load-in direction)
54	LOAD_POS	O	CD loading motor drive signal output (load-out direction)
55	IN_SW	I	Detection input from the tray open/close detect switch on the CD mechanism block "L": when tray is close, "H": when tray is open
56	OUT_SW	I	Detection input from the tray open/close detect switch on the CD mechanism block "L": when tray is open, "H": when tray is close
57 to 61	OPEN	—	Not used
62	VCC	—	Power supply terminal (+5V)
63	OPEN	—	Not used
64	VSS	—	Ground terminal
65	OPEN	—	Not used
66	SCMS	O	Relay drive signal output terminal
67	ADADZF	I	Audio line muting on/off control signal input terminal Not used
68	CS_ADALAT	O	Chip enable signal output to the A/D, D/A converter
69	ADACLK	O	Command data transfer clock signal output to the A/D, D/A converter
70	ADADATAO	O	Command data output to the A/D, D/A converter
71	CHECK1	O	Not used
72	ADADATAI	I	Command data input from the MP3 decoder
73	AUTOPWRON	I	Power on/off control signal input terminal. The signal input, when disc tray is open/close
74, 75	ADAINT1, ADAINT0	I	Interrupt status input from the A/D, D/A converter
76	ADARST	O	System reset signal output to the A/D, D/A converter
77, 78	CDJOG1, CDJOG0	I	Jog dial pulse input from the rotary encoder (for CD)
79	PDOWN_ MAINACCUT	I	Power down detection signal input "L": power down, normally: "H"
80	ADJ	—	Not used
81	DRVRST	O	System reset signal output to the FL/LED driver
82	OPEN	—	Not used
83	CHECK1	O	Not used
84	OPEN	—	Not used
85	LINEMUTE_ AMUTE	O	Audio line muting on/off control signal output "L": line muting on
86, 87	MDJOG1, MDJOG0	I	Jog dial pulse input from the rotary encoder (for MD)
88	MDRESET	O	System reset signal output to the MD mechanism controller
89	LEVEL_L	I	L-ch level input from the MD mechanism controller
90	LEVEL_R	I	R-ch level input from the MD mechanism controller
91	RECLEVEL	I	Rec level detection signal input terminal
92	SELECT0	I	For destination setting terminal
93	KEY3	I	Key input terminal Not used
94, 95	KEY2, KEY1	I	Key input terminal (A/D input)
96	AVSS	—	Ground terminal

Downloaded from www.Manualslib.com manuals search engine

Pin No.	Pin Name	I/O	Description
97	KEY0	I	Key input terminal (A/D input)
98	VREF	I	Reference voltage (+5V) input terminal
99	AVCC	—	Power supply terminal (+5V) (for analog system)
100	OPEN	—	Not used

Downloaded from www.Manualslib.com manuals search engine

• **MAIN BOARD IC12 M30624MGN-A23FP (MD MECHANISM CONTROLLER)**

Pin No.	Pin Name	I/O	Description
1	FLDT	O	Display serial data output terminal Not used
2	FLCK	O	Display serial data transfer clock signal output terminal Not used
3	LEVEL-L	O	L-channel level output to the system controller
4	LEVEL-R	O	R-channel level output to the system controller
5 to 7	OPEN	—	Not used
8	BYTE	I	External data bus line byte selection signal input "L": 16 bit, "H": 8 bit (fixed at "L")
9	CNVSS	—	Ground terminal
10	XIN-T	I	Sub system clock input terminal (32.768 kHz)
11	XOUT-T	O	Sub system clock output terminal (32.768 kHz)
12	SRST	I	System reset signal input from the system controller and regulator "L": reset For several hundreds msec. after the power supply rises, "L" is input, then it changes to "H"
13	XOUT	O	Main system clock output terminal (10 MHz)
14	GND	—	Ground terminal
15	XIN	I	Main system clock input terminal (10 MHz)
16	VCC	—	Power supply terminal (+3.3V)
17	NMI	I	Non-maskable interrupt input terminal (fixed at "H" in this set)
18	DQSY	I	Digital In U-bit CD format subcode Q sync (SCOR) input from the MD DSP "L" is input every 13.3 msec Almost all, "H" is input
19	PDOWN	I	Power down detection signal input terminal "L": power down, normally: "H"
20	SQSY	I	Subcode Q sync (SCOR) input from the MD DSP "L" is input every 13.3 msec Almost all, "H" is input
21	KBCLK	O	Not used
22	KBDATA	O	Not used
23	IICBUSY	O	Busy signal output for the I2C bus "L" active Not used
24	A1OUT	—	Not used
25	XINT	I	Interrupt status input from the MD DSP
26	BEEP	O	Beep sound drive signal output terminal Not used
27	XELT	O	Not used
28	IICPOWER	O	Not used
29	IICCLK	I	IIC data transfer clock signal input from the system controller
30	IICDATA	I/O	IIC data bus with the system controller
31	SWDT	O	Writing data output to the MD DSP
32	SRDT	I	Reading data input from the MD DSP
33	SCLK	O	Serial clock signal output to the MD DSP
34	KBCLKCTL	O	Not used
35	L3DATAO	O	L3 bus data output terminal Not used
36	L3DATAI	I	L3 bus data input terminal Not used
37	L3CLK	O	L3 bus data transfer clock signal output terminal Not used
38	L3MODE	O	L3 bus mode control signal output terminal Not used
39	ADARST	O	System reset signal output terminal Not used
40	ADALATCH	O	Serial data latch pulse output terminal Not used
41	EPM	I	Not used
42	OCLIPSEL	O	Not used
43	OPEN	—	Not used
44	PROTECT	I	Detection input from the disc reflection rate detect switch "L": high reflection rate disc, "H": low reflection rate disc
45	SCL (EEP)	O	Serial clock signal output to the EEPROM

Downloaded from www.Manualslib.com manuals search engine

Pin No.	Pin Name	I/O	Description
46	CE	I	Command chip enable signal input terminal Not used
47	EEP-WP	O	Write protect signal output to the EEPROM
48	XBUSY (MNT2)	I	Busy signal input from the MD DSP
49	OUTSW	I	Detection input from the loading-out detect switch “L” at a load-out position, others: “H”
50	XLATCH	O	Serial data latch pulse signal output to the MD DSP
51	PLAYSW	I	Detection input from the playback position detect switch “L” active
52	DRESET	O	Reset signal output to the MD DSP and motor/coil drive “L”: reset
53	RECSW	I	Detection input from the recording position detect switch “L” active
54	WRPWR	O	Laser power select signal output to the MD DSP and HF module switch circuit “L”: playback mode, “H”: recording mode
55	LIMITIN	I	Detection input from the sled limit-in detect switch The optical pick-up is inner position when “L”
56	MOD	O	Laser modulation select signal output to the HF module switch circuit Playback power: “H”, Stop: “L”, Recording power: 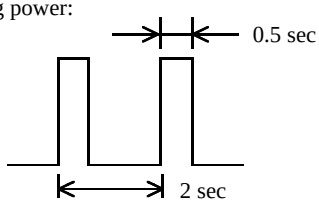
57	LDON	O	Laser diode on/off control signal output to the automatic power control circuit “H”: laser on
58	SENS	I	Internal status (SENSE) input from the MD DSP
59	SHOCK (MNT1)	I	Track jump detection signal input from the MD DSP
60	SDA (EEP)	I/O	Two-way data bus with the EEPROM
61	REFLECT	I	Detection input from the disc reflection rate detect switch “L”: high reflection rate disc, “H”: low reflection rate disc
62	VCC	—	Power supply terminal (+3.3V)
63	OPEN	—	Not used
64	VSS	—	Ground terminal
65	LOAD LO	O	Loading motor drive voltage control signal output for the loading motor driver “H” active
66	LOAD IN	O	MD loading motor drive signal output (load-in direction)
67	LOAD OUT	O	MD loading motor drive signal output (load-out direction)
68, 69	MODEL0, MODEL1	I	For model setting terminal Not used
70, 71	$\overline{\text{J/OTHER}}$ (SEL0), $\overline{\text{J/OTHER}}$ (SEL1)	I	For destination setting terminal
72	SPDIF_CUT	O	Not used
73 to 76	OPEN	—	Not used
77	LINEMUTE	O	Audio line muting on/off control signal output terminal Not used
78	DA_RESET	O	Not used
79	OPEN	—	Not used
80	SPDIF_LOCK	I	Lock signal input terminal Not used
81	OPTSEL	O	Not used
82	ADPDOWN	O	Not used
83, 84	OPEN	—	Not used
85 to 87	TP1 to TP3	O	Not used
88	TOUNLOCK (TP4)	O	Not used

Downloaded from www.Manualslib.com manuals search engine

Pin No.	Pin Name	I/O	Description
89	IOP	I	Optical pick-up voltage input from the automatic power control circuit
90 to 95	OPEN	—	Not used
96	AVSS	—	Ground terminal (for A/D converter)
97	OPEN	—	Not used
98	VREF	I	Reference voltage (+3.3V) input terminal (for A/D converter)
99	AVCC	—	Power supply terminal (+3.3V) (for A/D converter)
100	OPEN	—	Not used

Downloaded from www.Manualslib.com manuals search engine

SECTION 7
EXPLODED VIEWS

NOTE:
- -XX and -X mean standardized parts, so they may have some difference from the original one.
- Color Indication of Appearance Parts
  Example:
  KNOB, BALANCE (WHITE) . . . (RED)
  ↑ Parts Color ↑ Cabinet's Color
- Items marked "*" are not stocked since they are seldom required for routine service. Some delay should be anticipated when ordering these items.
- Accessories and packing materials are given in the last of the electrical parts list.

The components identified by mark ⚠ or dotted line with mark ⚠ are critical for safety.
Replace only with part number specified.

7-1. OVERALL SECTION

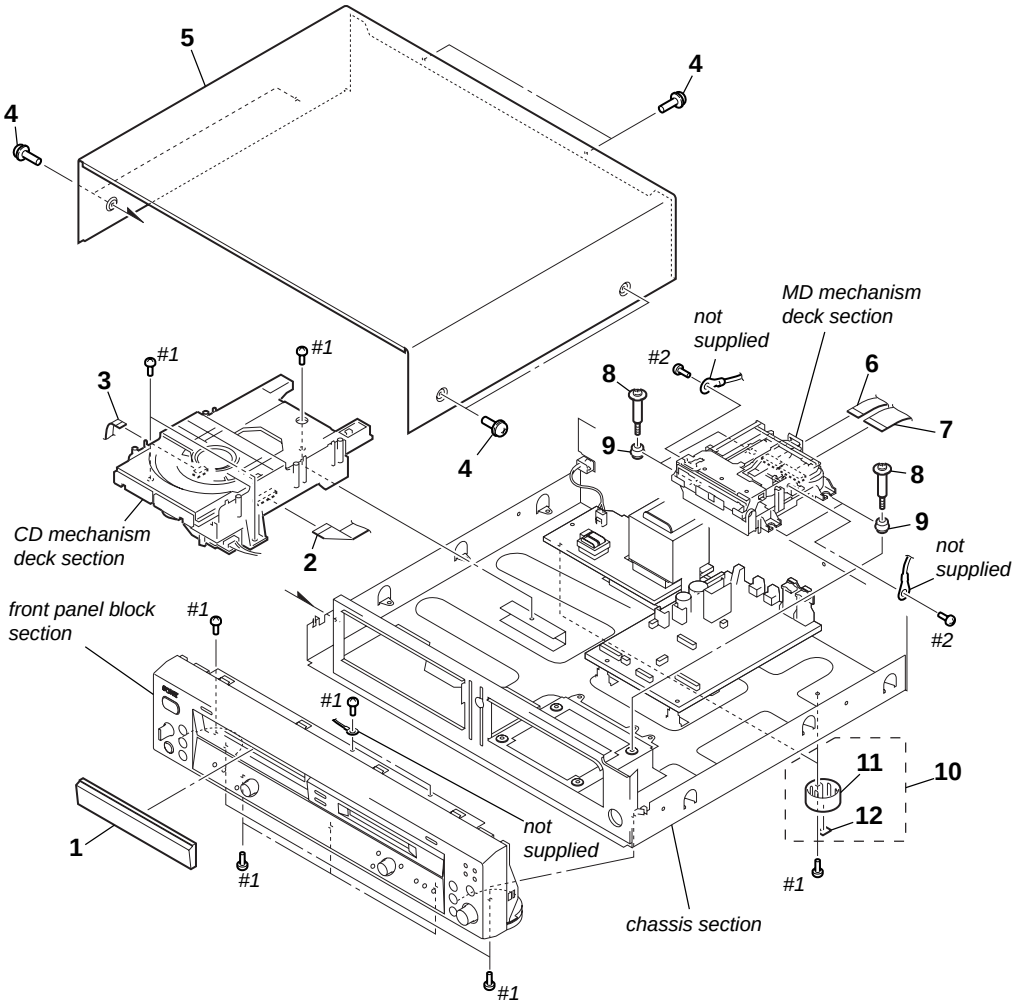

Ref. No.	Part No.	Description	Remark
1	4-245-456-01	PANEL (CD), LOADING	
2	1-782-279-11	WIRE (FLAT TYPE) (25 CORE)	
3	1-782-243-11	WIRE (FLAT TYPE) (9 CORE)	
4	4-210-291-01	SCREW (CASE 3 TP2)	
5	4-231-686-11	CASE (409538)	
6	1-782-109-11	WIRE (FLAT TYPE) (17 CORE)	
7	1-782-244-11	WIRE (FLAT TYPE) (27 CORE)	
8	4-228-643-11	SCREW (+BVTTWH M3), STEP	
9	4-228-689-01	INSULATOR	
10	X-4953-448-1	FOOT ASSY	
11	4-232-237-01	FOOT (DIA. 30)	
12	4-977-358-01	CUSHION	
#1	7-685-646-79	SCREW +BVTP 3X8 TYPE2 IT-3	
#2	7-685-850-04	SCREW +BVTT 2X3 (S)	

Downloaded from www.Manualslib.com manuals search engine

7-2. FRONT PANEL SECTION

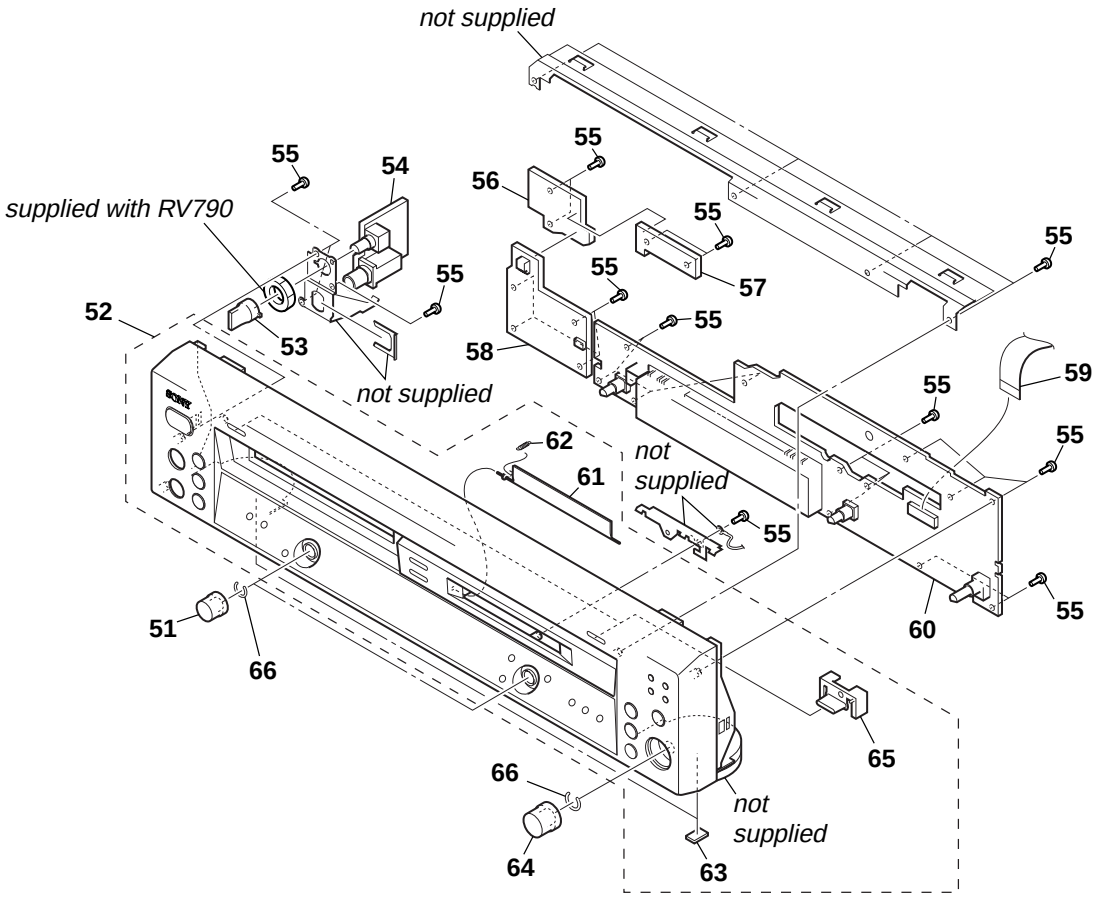

Ref. No.	Part No.	Description	Remark	Ref. No.	Part No.	Description	Remark
51	4-238-396-01	KNOB (AMS)		59	1-777-556-11	WIRE (FLAT TYPE) (19 CORE)	
52	X-4955-450-1	PANEL ASSY, FRONT		60	A-4732-471-A	DISPLAY BOARD, COMPLETE	
53	3-931-378-51	KNOB (F10)		61	4-228-761-02	LID (CARTRIDGE)	
54	1-687-904-11	HP BOARD		62	4-230-410-12	SPRING (LID), TENSION	
55	4-951-620-01	SCREW (2.6X8), +BVTP		63	4-977-358-01	CUSHION	
56	1-687-905-11	POWER SWITCH BOARD		64	4-238-396-11	KNOB (AMS)	
57	1-687-906-11	CD-EJECT BOARD		65	4-238-386-21	BUTTON (OPEN/CLOSE)	
58	1-687-903-11	CD-SW BOARD		66	3-354-981-11	SPRING (SUS), RING	

Downloaded from www.Manualslib.com manuals search engine

7-3. CHASSIS SECTION

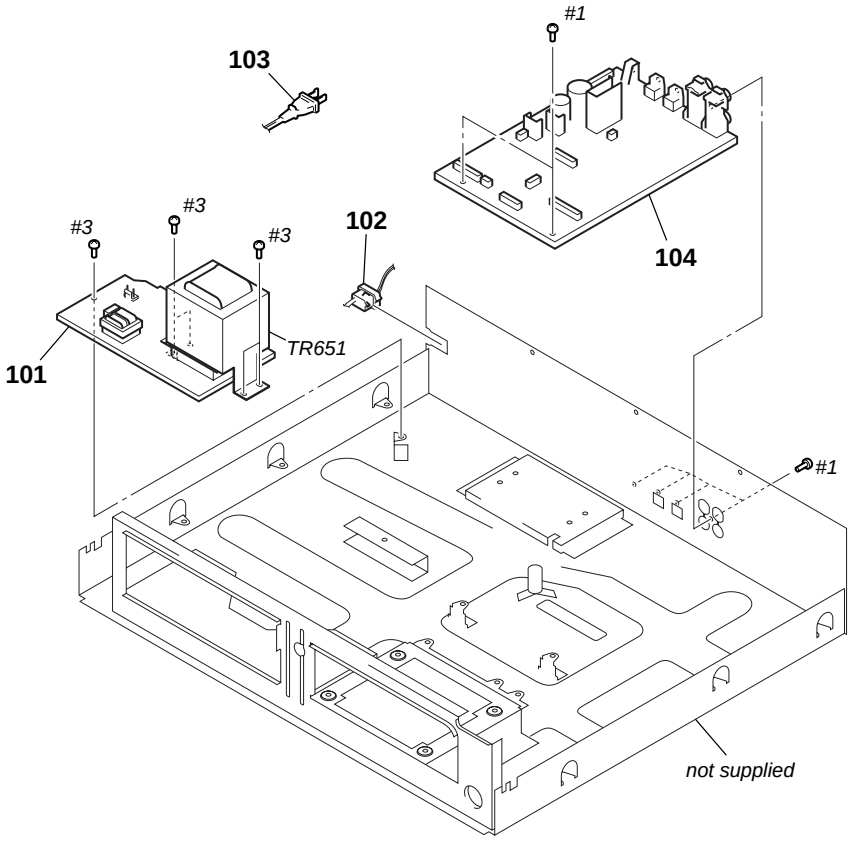

The components identified by mark ⚠ or dotted line with mark ⚠ are critical for safety.
Replace only with part number specified.

Ref. No.	Part No.	Description	Remark
101	1-687-901-11	TRANSFORMER BOARD	
* 102	3-703-244-00	BUSHING (2104), CORD	
⚠103	1-783-531-11	CORD, POWER	
104	A-4732-635-A	MAIN BOARD, COMPLETE	

Ref. No.	Part No.	Description	Remark
⚠TR651	1-439-732-11	TRANSFORMER, POWER	
#1	7-685-646-79	SCREW +BVTP 3X8 TYPE2 IT-3	
#3	7-685-871-01	SCREW +BVTT 3X6 (S)	

Downloaded from www.Manualslib.com manuals search engine

7-4. MD MECHANISM DECK SECTION-1 (MDM-7S2C)

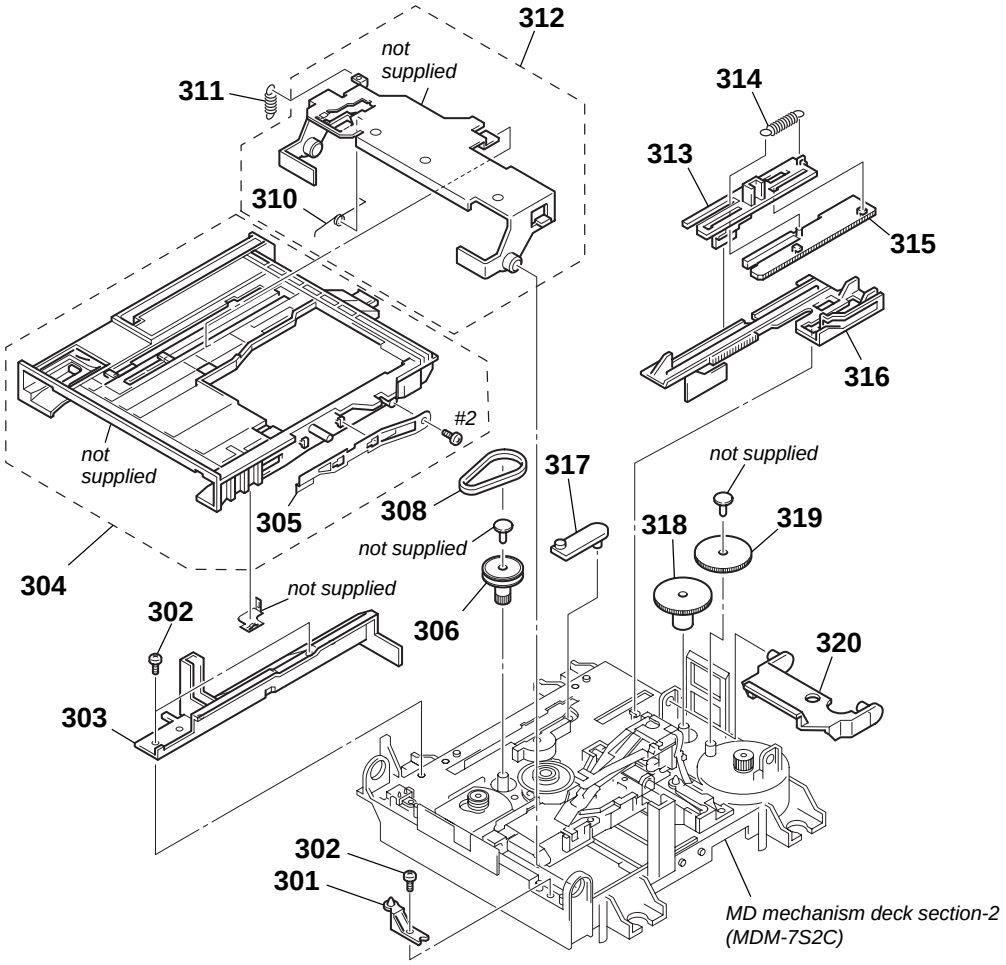

Ref. No.	Part No.	Description	Remark
* 301	4-996-267-01	BASE (BU-D)	
302	4-231-319-01	SCREW (2X6) CZN, +B (P) TRI	
303	4-226-994-01	GUIDE (L)	
304	A-4735-075-B	HOLDER ASSY	
305	X-4952-665-1	SPRING (SHT) ASSY, LEAF	
306	4-227-002-01	GEAR, PULLEY	
308	4-227-025-01	BELT (LOADING)	
310	4-229-533-01	SPRING (STOPPER), TORSION	
311	4-227-012-02	SPRING (HOLDER), TENSION	
312	A-4680-638-B	RETAINER COMPLETE ASSY	

Ref. No.	Part No.	Description	Remark
313	4-226-995-01	SLIDER (EJ)	
314	4-227-013-01	SPRING (EJ), TENSION	
315	4-226-996-01	LIMITTER (EJ)	
316	4-226-997-04	SLIDER	
317	4-226-998-01	LEVER (CHG)	
318	4-227-007-01	GEAR (SB)	
319	4-227-006-01	GEAR (SA)	
320	4-226-999-01	LEVER (HEAD)	
#2	7-685-850-04	SCREW +BVTT 2X3 (S)	

Downloaded from www.Manualslib.com manuals search engine

7-5. MD MECHANISM DECK SECTION-2 (MDM-7S2C)

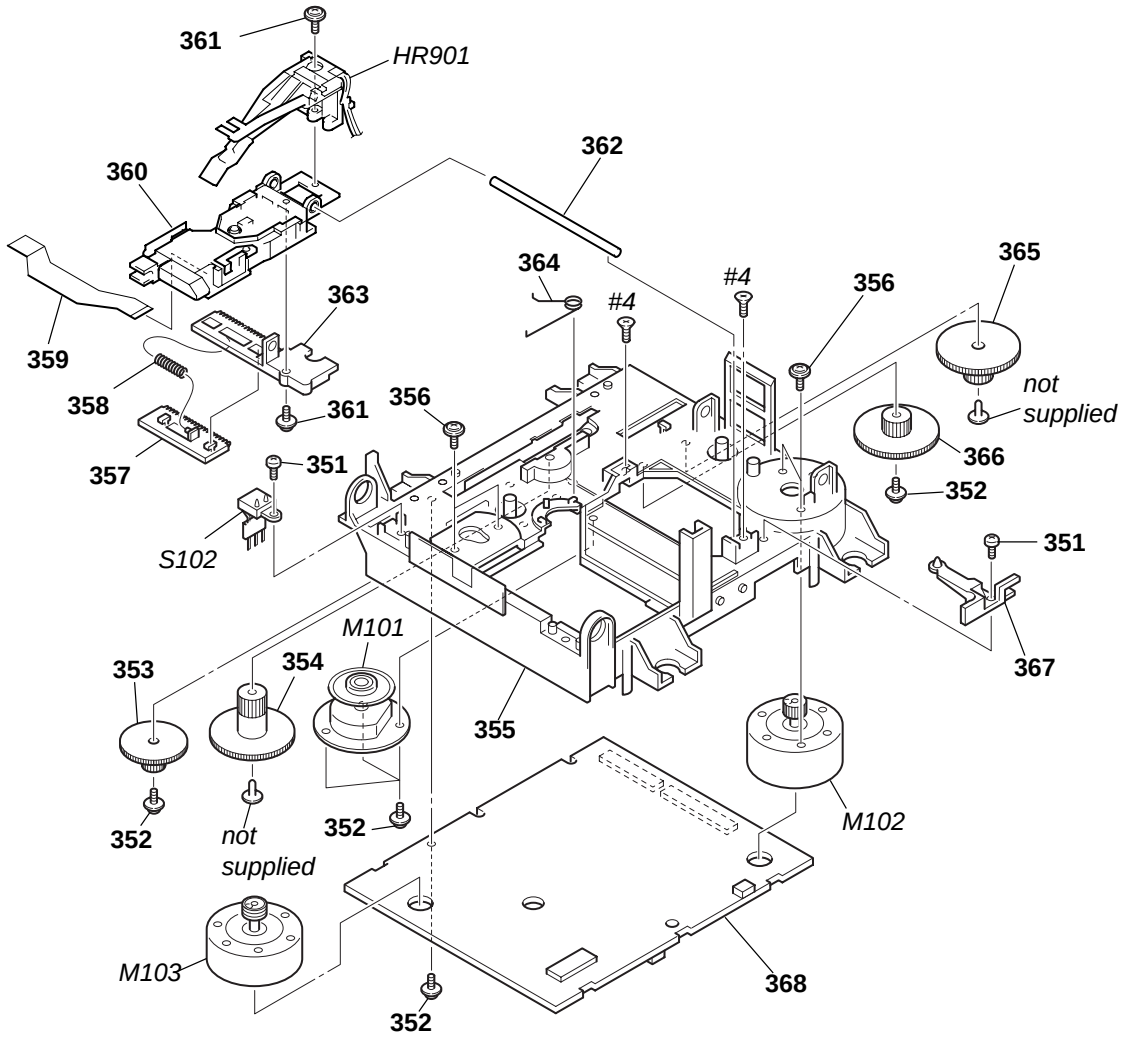

The components identified by mark ⚠ or dotted line with mark ⚠ are critical for safety.
Replace only with part number specified.

Ref. No.	Part No.	Description	Remark
351	4-231-319-01	SCREW (2X6) CZN, +B (P) TRI	
352	3-372-761-01	SCREW (M1.7), TAPPING	
353	4-227-008-01	GEAR (SC)	
354	4-227-009-01	GEAR (SD)	
355	4-231-372-01	CHASSIS	
356	4-232-270-01	SCREW (1.7X3.5), +PWH	
357	4-226-993-01	RACK	
358	4-227-014-01	SPRING (RACK), COMPRESSION	
359	1-678-514-11	FLEXIBLE BOARD	
⚠360	A-4672-976-A	OPTICAL PICK-UP (KMS-262)	
361	4-988-560-01	SCREW (+P 1.7X6)	
362	4-996-265-01	SHAFT, MAIN	
363	4-226-992-01	BASE, SL	
364	4-230-716-01	SPRING (SPDL), TORSION	
365	4-227-004-01	GEAR (LC)	
366	4-227-005-01	GEAR (LD)	
367	4-226-990-04	BASE (BU-A)	
368	A-4727-928-A	BD (MD) BOARD, COMPLETE	
HR901	1-500-670-22	HEAD, OVER WRIGHT	
M101	A-4735-757-A	MOTOR ASSY, SPINDLE	
M102	A-4672-900-A	MOTOR ASSY, SLED	
M103	A-4672-975-A	MOTOR ASSY, LOADING	
S102	1-771-957-11	SWITCH, PUSH (2 KEY) (REFRECT/PROTECT)	
#4	7-685-204-19	SCREW +KTP 2X6 TYPE2 NON-SLIT	

Downloaded from www.Manualslib.com manuals search engine

7-6. CD MECHANISM DECK SECTION (CDM66C-30B61M)

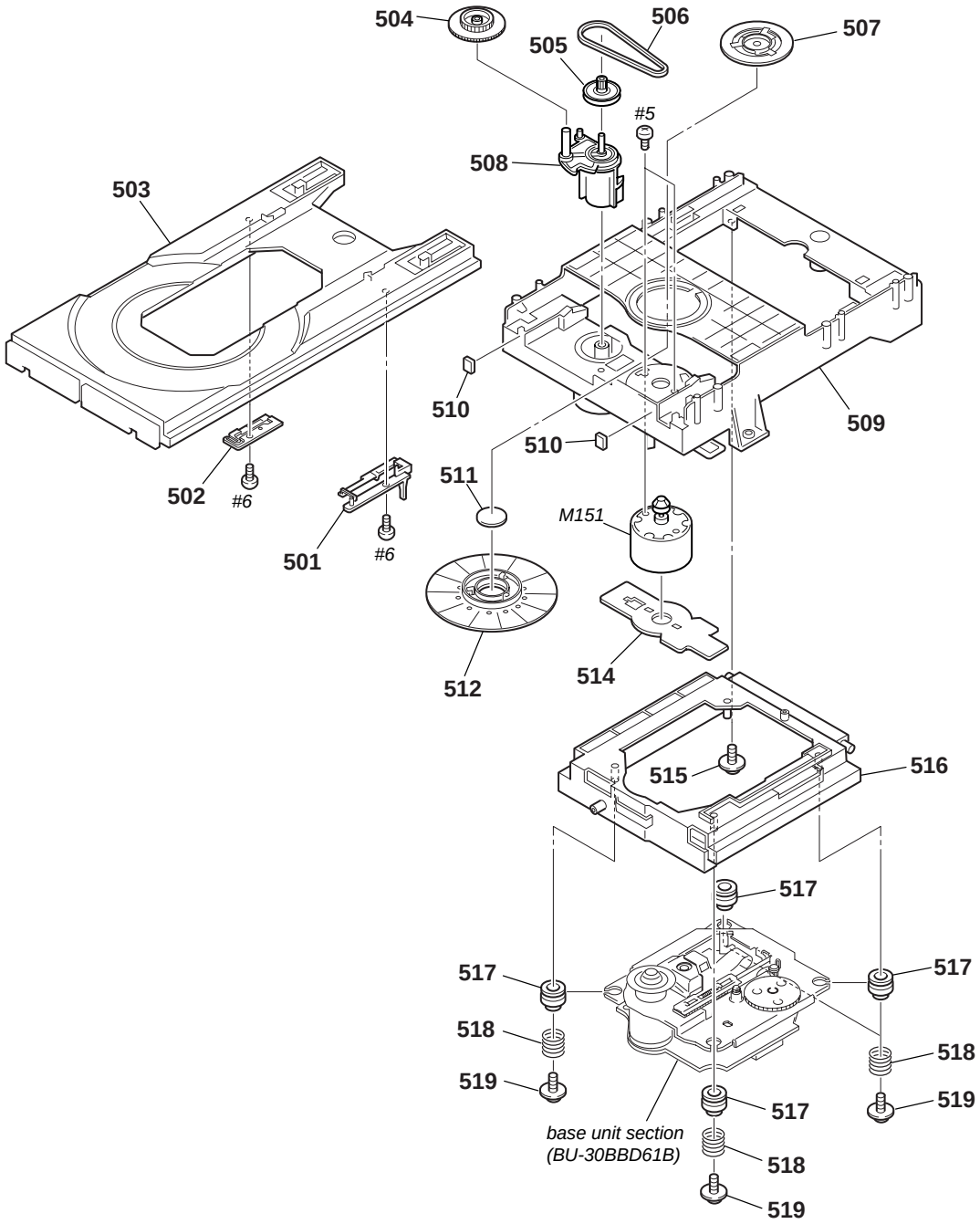

Ref. No.	Part No.	Description	Remark
501	4-238-370-02	LEVER (SW)	
502	4-238-371-01	LEVER (STP)	
503	4-231-530-05	TRAY (66)	
504	4-232-711-01	GEAR (LD)	
505	4-232-710-01	PULLEY (LD)	
506	4-232-713-01	BELT (LD)	
507	4-238-368-01	PULLEY (B), CHUCKING	
508	4-232-712-01	CAM (66)	
509	4-231-529-04	CHASSIS (66)	
510	4-232-682-01	CUSHION (66)	
511	4-228-414-01	BRACKET (YOKE)	
512	X-4954-474-1	PULLEY ASSY, CHUCKING	
514	1-645-721-11	LOADING BOARD	
515	4-227-899-01	SCREW (DIA. 12), FLOATING	
516	4-238-369-02	HOLDER (BU)	
517	4-240-820-01	INSULATOR (B) (BU-30B)	
518	4-238-372-01	SPRING (INSULATOR),COMPRESSION	
519	4-985-672-01	SCREW (+PTPWH M2.6), FLOATING	
M151	A-4604-363-A	MOTOR (L) ASSY (LOADING)	
#5	7-621-775-10	SCREW +B 2.6X4	
#6	7-685-133-19	SCREW +P 2.6X6 TYPE2 NON-SLIT	

Downloaded from www.Manualslib.com manuals search engine

7-7. BASE UNIT SECTION (BU-30BD61M)

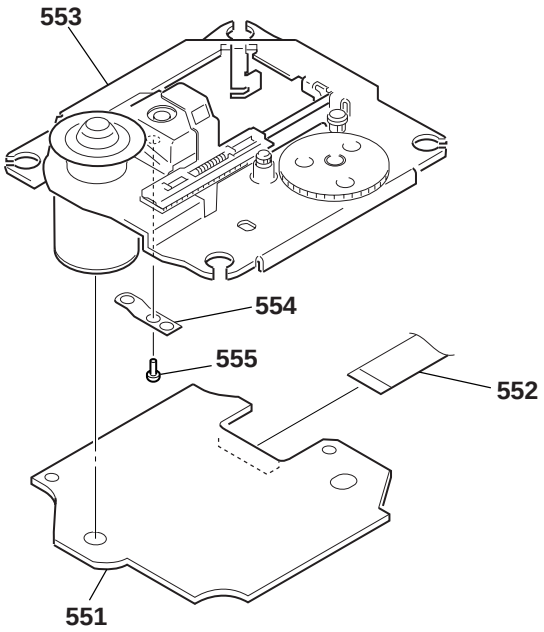

The components identified by mark ⚠ or dotted line with mark ⚠ are critical for safety.
Replace only with part number specified.

Ref. No.	Part No.	Description	Remark
551	A-4732-100-A	BD (CD) BOARD, COMPLETE	
552	1-782-817-11	WIRE (FLAT TYPE) (16 CORE)	
⚠553	A-4735-885-A	BU-30B ASSY	
554	4-236-304-02	SPRING (SLED), LEAF	
555	3-372-761-01	SCREW (M1.7), TAPPING	

Downloaded from www.Manualslib.com manuals search engine

SECTION 8
ELECTRICAL PARTS LIST

BD (CD)

NOTE:
- Due to standardization, replacements in the parts list may be different from the parts specified in the diagrams or the components used on the set.
- -XX and -X mean standardized parts, so they may have some difference from the original one.
- RESISTORS
  All resistors are in ohms.
  METAL: Metal-film resistor.
  METAL OXIDE: Metal oxide-film resistor.
  F: nonflammable
- Items marked "*" are not stocked since they are seldom required for routine service. Some delay should be anticipated when ordering these items.
- SEMICONDUCTORS
  In each case, u: µ, for example:
  uA. . : µA. . uPA. . : µPA. .
  uPB. . : µPB. . uPC. . : µPC. .
  uPD. . : µPD. .
- CAPACITORS
  uF: µF
- COILS
  uH: µH

The components identified by mark ⚠ or dotted line with mark ⚠ are critical for safety.
Replace only with part number specified.

When indicating parts by reference number, please include the board.

Ref. No.	Part No.	Description			Remark
	A-4732-100-A	BD (CD) BOARD, COMPLETE			
		**********			
		< CAPACITOR >			
C101	1-164-315-11	CERAMIC CHIP	470PF	5%	50V
C102	1-107-826-11	CERAMIC CHIP	0.1uF	10%	16V
C103	1-164-315-11	CERAMIC CHIP	470PF	5%	50V
C104	1-162-967-11	CERAMIC CHIP	0.0033uF	10%	50V
C107	1-162-921-11	CERAMIC CHIP	33PF	5%	50V
C108	1-164-360-11	CERAMIC CHIP	0.1uF		16V
C109	1-164-360-11	CERAMIC CHIP	0.1uF		16V
C110	1-107-826-11	CERAMIC CHIP	0.1uF	10%	16V
C111	1-126-607-11	ELECT CHIP	47uF	20%	4V
C112	1-164-360-11	CERAMIC CHIP	0.1uF		16V
C113	1-128-995-21	ELECT CHIP	100uF	20%	10V
C114	1-162-964-11	CERAMIC CHIP	0.001uF	10%	50V
C115	1-128-995-21	ELECT CHIP	100uF	20%	10V
C116	1-107-826-11	CERAMIC CHIP	0.1uF	10%	16V
C117	1-164-360-11	CERAMIC CHIP	0.1uF		16V
C118	1-115-156-11	CERAMIC CHIP	1uF		10V
C119	1-115-156-11	CERAMIC CHIP	1uF		10V
C121	1-164-360-11	CERAMIC CHIP	0.1uF		16V
C131	1-110-563-11	CERAMIC CHIP	0.068uF	10%	16V
C132	1-164-227-11	CERAMIC CHIP	0.022uF	10%	25V
C133	1-125-838-11	CERAMIC CHIP	2.2uF	10%	6.3V
C150	1-128-394-11	ELECT CHIP	220uF	20%	10V
C151	1-164-360-11	CERAMIC CHIP	0.1uF		16V
C152	1-164-360-11	CERAMIC CHIP	0.1uF		16V
C153	1-164-360-11	CERAMIC CHIP	0.1uF		16V
C156	1-162-968-11	CERAMIC CHIP	0.0047uF	10%	50V
C157	1-115-416-11	CERAMIC CHIP	0.001uF	5%	25V
C158	1-162-970-11	CERAMIC CHIP	0.01uF	10%	25V
C159	1-162-927-11	CERAMIC CHIP	100PF	5%	50V
C160	1-107-826-11	CERAMIC CHIP	0.1uF	10%	16V
C161	1-107-826-11	CERAMIC CHIP	0.1uF	10%	16V
C163	1-107-826-11	CERAMIC CHIP	0.1uF	10%	16V
C164	1-107-826-11	CERAMIC CHIP	0.1uF	10%	16V
C165	1-107-826-11	CERAMIC CHIP	0.1uF	10%	16V
C169	1-128-394-11	ELECT CHIP	220uF	20%	10V
C202	1-164-360-11	CERAMIC CHIP	0.1uF		16V
C203	1-162-964-11	CERAMIC CHIP	0.001uF	10%	50V
C205	1-164-360-11	CERAMIC CHIP	0.1uF		16V
C208	1-164-360-11	CERAMIC CHIP	0.1uF		16V
C209	1-164-230-11	CERAMIC CHIP	220PF	5%	50V
C211	1-117-863-11	CERAMIC CHIP	0.47uF	10%	6.3V
C212	1-164-315-11	CERAMIC CHIP	470PF	5%	50V
C213	1-115-414-11	CERAMIC CHIP	820PF	5%	25V
C215	1-117-863-11	CERAMIC CHIP	0.47uF	10%	6.3V
C216	1-162-970-11	CERAMIC CHIP	0.01uF	10%	25V
C222	1-115-156-11	CERAMIC CHIP	1uF		10V
C224	1-115-156-11	CERAMIC CHIP	1uF		10V
C226	1-126-607-11	ELECT CHIP	47uF	20%	4V
C227	1-164-360-11	CERAMIC CHIP	0.1uF		16V
C228	1-115-156-11	CERAMIC CHIP	1uF		10V
C229	1-164-360-11	CERAMIC CHIP	0.1uF		16V
C230	1-164-360-11	CERAMIC CHIP	0.1uF		16V
C231	1-128-394-11	ELECT CHIP	220uF	20%	10V
C248	1-125-838-11	CERAMIC CHIP	2.2uF	10%	6.3V
C249	1-164-360-11	CERAMIC CHIP	0.1uF		16V
C250	1-164-360-11	CERAMIC CHIP	0.1uF		16V
C251	1-164-360-11	CERAMIC CHIP	0.1uF		16V
C253	1-164-360-11	CERAMIC CHIP	0.1uF		16V
C254	1-162-913-11	CERAMIC CHIP	8PF	0.5PF	50V
C255	1-164-360-11	CERAMIC CHIP	0.1uF		16V
C256	1-164-360-11	CERAMIC CHIP	0.1uF		16V
C257	1-128-934-11	CERAMIC CHIP	0.33uF	20%	10V
C258	1-162-913-11	CERAMIC CHIP	8PF	0.5PF	50V
C259	1-164-360-11	CERAMIC CHIP	0.1uF		16V
C260	1-131-998-21	ELECT CHIP	82uF	20%	6.3V
C266	1-164-360-11	CERAMIC CHIP	0.1uF		16V
C270	1-162-960-11	CERAMIC CHIP	220PF	10%	50V
C271	1-162-970-11	CERAMIC CHIP	0.01uF	10%	25V
C273	1-162-960-11	CERAMIC CHIP	220PF	10%	50V
C274	1-162-970-11	CERAMIC CHIP	0.01uF	10%	25V
C277	1-216-864-11	SHORT CHIP	0		
C292	1-164-360-11	CERAMIC CHIP	0.1uF		16V
C301	1-115-414-11	CERAMIC CHIP	820PF	5%	25V
C302	1-162-966-11	CERAMIC CHIP	0.0022uF	10%	50V
C303	1-164-360-11	CERAMIC CHIP	0.1uF		16V
C304	1-125-838-11	CERAMIC CHIP	2.2uF	10%	6.3V
C305	1-162-970-11	CERAMIC CHIP	0.01uF	10%	25V
C307	1-164-360-11	CERAMIC CHIP	0.1uF		16V
C310	1-164-360-11	CERAMIC CHIP	0.1uF		16V
		< CONNECTOR >			
CN101	1-794-424-11	CONNECTOR, FCC/FPC 16P			
CN103	1-784-875-21	CONNECTOR, FFC (LIF (NON-ZIF)) 25P			

Downloaded from www.Manualslib.com manuals search engine

BD (CD)

Ref. No.	Part No.	Description			Remark
CN105	1-784-861-21	CONNECTOR, FFC (LIF (NON-ZIF)) 9P			
		< SHORT/FERRITE BEAD >			
FB101	1-216-295-00	SHORT CHIP	0		
FB102	1-216-864-11	SHORT CHIP	0		
FB103	1-216-864-11	SHORT CHIP	0		
FB104	1-216-864-11	SHORT CHIP	0		
* FB161	1-469-670-21	FERRITE	0uH		
FB201	1-216-295-00	SHORT CHIP	0		
* FB202	1-469-670-21	FERRITE	0uH		
FB203	1-500-283-11	FERRITE	0uH		
FB291	1-216-864-11	SHORT CHIP	0		
FB351	1-216-864-11	SHORT CHIP	0		
		< IC >			
IC101	8-752-408-73	IC CXD3068Q			
IC102	8-759-713-71	IC AN41050			
IC103	8-752-106-21	IC CXA2647N-T4			
IC104	6-704-150-01	IC CXD9717R-008			
IC105	8-759-833-99	IC TC74HC4052AFT (EL)			
IC122	6-701-808-01	IC BA33C25FP-E2			
		< SHORT >			
JR2	1-216-864-11	SHORT CHIP	0		
		< COIL >			
L163	1-412-967-31	INDUCTOR	0.1uH		
		< TRANSISTOR >			
Q101	8-729-046-90	TRANSISTOR	2SB970-(TX).S0		
		< RESISTOR >			
R101	1-216-864-11	SHORT CHIP	0		
R102	1-216-835-11	METAL CHIP	15K	5%	1/10W
R103	1-216-845-11	METAL CHIP	100K	5%	1/10W
R104	1-216-835-11	METAL CHIP	15K	5%	1/10W
R105	1-216-821-11	METAL CHIP	1K	5%	1/10W
R111	1-216-847-11	METAL CHIP	150K	5%	1/10W
R113	1-218-701-11	METAL CHIP	2.4K	5%	1/10W
R114	1-216-852-11	METAL CHIP	390K	5%	1/10W
R115	1-216-839-11	METAL CHIP	33K	5%	1/10W
R116	1-216-839-11	METAL CHIP	33K	5%	1/10W
R117	1-216-846-11	METAL CHIP	120K	5%	1/10W
R118	1-216-833-11	METAL CHIP	10K	5%	1/10W
R120	1-216-846-11	METAL CHIP	120K	5%	1/10W
R122	1-216-845-11	METAL CHIP	100K	5%	1/10W
R123	1-216-791-11	METAL CHIP	3.3	5%	1/10W
R125	1-216-840-11	METAL CHIP	39K	5%	1/10W
R126	1-216-840-11	METAL CHIP	39K	5%	1/10W
R131	1-216-843-11	METAL CHIP	68K	5%	1/10W
R132	1-216-851-11	METAL CHIP	330K	5%	1/10W
R133	1-216-825-11	METAL CHIP	2.2K	5%	1/10W
R151	1-216-833-11	METAL CHIP	10K	5%	1/10W
R152	1-216-837-11	METAL CHIP	22K	5%	1/10W
R155	1-216-840-11	METAL CHIP	39K	5%	1/10W
R157	1-216-864-11	SHORT CHIP	0		
R158	1-216-821-11	METAL CHIP	1K	5%	1/10W

Ref. No.	Part No.	Description			Remark
R166	1-216-864-11	SHORT CHIP	0		
R167	1-216-864-11	SHORT CHIP	0		
R168	1-216-864-11	SHORT CHIP	0		
R169	1-216-864-11	SHORT CHIP	0		
R199	1-216-864-11	SHORT CHIP	0		
R201	1-216-839-11	METAL CHIP	33K	5%	1/10W
R202	1-216-833-11	METAL CHIP	10K	5%	1/10W
R203	1-216-845-11	METAL CHIP	100K	5%	1/10W
R204	1-216-833-11	METAL CHIP	10K	5%	1/10W
R205	1-216-823-11	METAL CHIP	1.5K	5%	1/10W
R206	1-216-850-11	METAL CHIP	270K	5%	1/10W
R207	1-216-853-11	METAL CHIP	470K	5%	1/10W
R208	1-216-811-11	METAL CHIP	150	5%	1/10W
R216	1-216-857-11	METAL CHIP	1M	5%	1/10W
R218	1-216-821-11	METAL CHIP	1K	5%	1/10W
R219	1-216-821-11	METAL CHIP	1K	5%	1/10W
R220	1-216-821-11	METAL CHIP	1K	5%	1/10W
R221	1-216-809-11	METAL CHIP	100	5%	1/10W
R222	1-216-809-11	METAL CHIP	100	5%	1/10W
R223	1-216-809-11	METAL CHIP	100	5%	1/10W
R224	1-216-809-11	METAL CHIP	100	5%	1/10W
R225	1-216-809-11	METAL CHIP	100	5%	1/10W
R226	1-216-809-11	METAL CHIP	100	5%	1/10W
R227	1-216-809-11	METAL CHIP	100	5%	1/10W
R228	1-216-809-11	METAL CHIP	100	5%	1/10W
R229	1-216-809-11	METAL CHIP	100	5%	1/10W
R230	1-216-811-11	METAL CHIP	150	5%	1/10W
R231	1-216-815-11	METAL CHIP	330	5%	1/10W
R232	1-216-815-11	METAL CHIP	330	5%	1/10W
R233	1-216-815-11	METAL CHIP	330	5%	1/10W
R249	1-216-818-11	METAL CHIP	560	5%	1/10W
R250	1-216-813-11	METAL CHIP	220	5%	1/10W
R251	1-216-813-11	METAL CHIP	220	5%	1/10W
R252	1-216-833-11	METAL CHIP	10K	5%	1/10W
R253	1-216-813-11	METAL CHIP	220	5%	1/10W
R255	1-216-809-11	METAL CHIP	100	5%	1/10W
R257	1-216-809-11	METAL CHIP	100	5%	1/10W
R259	1-216-809-11	METAL CHIP	100	5%	1/10W
R260	1-216-821-11	METAL CHIP	1K	5%	1/10W
R271	1-216-833-11	METAL CHIP	10K	5%	1/10W
R272	1-216-829-11	METAL CHIP	4.7K	5%	1/10W
R275	1-216-833-11	METAL CHIP	10K	5%	1/10W
R276	1-216-809-11	METAL CHIP	100	5%	1/10W
R279	1-216-809-11	METAL CHIP	100	5%	1/10W
R291	1-216-864-11	SHORT CHIP	0		
R301	1-216-847-11	METAL CHIP	150K	5%	1/10W
R302	1-216-842-11	METAL CHIP	56K	5%	1/10W
R304	1-216-809-11	METAL CHIP	100	5%	1/10W
R305	1-216-845-11	METAL CHIP	100K	5%	1/10W
R308	1-500-283-11	FERRITE	0uH		
R309	1-500-283-11	FERRITE	0uH		
R312	1-216-864-11	SHORT CHIP	0		
R313	1-216-864-11	SHORT CHIP	0		
R314	1-216-864-11	SHORT CHIP	0		
R315	1-216-864-11	SHORT CHIP	0		
R318	1-216-864-11	SHORT CHIP	0		
R320	1-216-864-11	SHORT CHIP	0		

Downloaded from www.Manualslib.com manuals search engine

BD (CD) BD (MD)

Ref. No.	Part No.	Description			Remark
		< VARIABLE RESISTOR >			
RV101	1-223-997-21	RES, CARBON ADJ VAR 47K			
		< VIBRATOR >			
X201	1-767-518-11	VIBRATOR, CRYSTAL (33.8688MHz)			
**********					
	A-4727-928-A	BD (MD) BOARD, COMPLETE **********			
		< CAPACITOR >			
C101	1-117-720-11	CERAMIC CHIP	4.7uF		10V
C103	1-162-970-11	CERAMIC CHIP	0.01uF	10%	25V
C104	1-164-156-11	CERAMIC CHIP	0.1uF		25V
C105	1-135-259-11	TANTALUM CHIP	10uF	20%	6.3V
C106	1-135-259-11	TANTALUM CHIP	10uF	20%	6.3V
C107	1-164-227-11	CERAMIC CHIP	0.022uF	10%	25V
C108	1-164-156-11	CERAMIC CHIP	0.1uF		25V
C109	1-165-176-11	CERAMIC CHIP	0.047uF	10%	16V
C110	1-115-416-11	CERAMIC CHIP	0.001uF	5%	25V
C111	1-162-970-11	CERAMIC CHIP	0.01uF	10%	25V
C112	1-164-227-11	CERAMIC CHIP	0.022uF	10%	25V
C113	1-162-969-11	CERAMIC CHIP	0.0068uF	10%	25V
C114	1-162-966-11	CERAMIC CHIP	0.0022uF	10%	50V
C115	1-164-156-11	CERAMIC CHIP	0.1uF		25V
C116	1-117-720-11	CERAMIC CHIP	4.7uF		10V
C117	1-162-970-11	CERAMIC CHIP	0.01uF	10%	25V
C118	1-162-968-11	CERAMIC CHIP	0.0047uF	10%	50V
C119	1-125-837-11	CERAMIC CHIP	1uF	10%	6.3V
C120	1-110-563-11	CERAMIC CHIP	0.068uF	10%	16V
C121	1-162-970-11	CERAMIC CHIP	0.01uF	10%	25V
C122	1-164-677-11	CERAMIC CHIP	0.033uF	10%	16V
C175	1-164-156-11	CERAMIC CHIP	0.1uF		25V
C194	1-164-156-11	CERAMIC CHIP	0.1uF		25V
C205	1-162-966-11	CERAMIC CHIP	0.0022uF	10%	50V
C206	1-126-206-11	ELECT CHIP	100uF	20%	6.3V
C209	1-162-927-11	CERAMIC CHIP	100PF	5%	50V
C211	1-162-927-11	CERAMIC CHIP	100PF	5%	50V
C212	1-162-927-11	CERAMIC CHIP	100PF	5%	50V
C214	1-162-970-11	CERAMIC CHIP	0.01uF	10%	25V
C215	1-164-677-11	CERAMIC CHIP	0.033uF	10%	16V
C216	1-125-889-11	CERAMIC CHIP	2.2uF	10%	10V
C219	1-162-927-11	CERAMIC CHIP	100PF	5%	50V
C220	1-125-891-11	CERAMIC CHIP	0.47uF	10%	10V
C221	1-162-970-11	CERAMIC CHIP	0.01uF	10%	25V
C230	1-164-156-11	CERAMIC CHIP	0.1uF		25V
C231	1-164-156-11	CERAMIC CHIP	0.1uF		25V
C233	1-164-156-11	CERAMIC CHIP	0.1uF		25V
C234	1-164-156-11	CERAMIC CHIP	0.1uF		25V
C235	1-164-156-11	CERAMIC CHIP	0.1uF		25V
C240	1-164-156-11	CERAMIC CHIP	0.1uF		25V
C241	1-164-156-11	CERAMIC CHIP	0.1uF		25V
C242	1-164-156-11	CERAMIC CHIP	0.1uF		25V
C250	1-164-156-11	CERAMIC CHIP	0.1uF		25V
C251	1-164-156-11	CERAMIC CHIP	0.1uF		25V
C252	1-164-156-11	CERAMIC CHIP	0.1uF		25V
C253	1-164-156-11	CERAMIC CHIP	0.1uF		25V
C254	1-162-970-11	CERAMIC CHIP	0.01uF	10%	25V
C255	1-164-156-11	CERAMIC CHIP	0.1uF		25V
C299	1-164-156-11	CERAMIC CHIP	0.1uF		25V
C301	1-164-156-11	CERAMIC CHIP	0.1uF		25V
C302	1-164-156-11	CERAMIC CHIP	0.1uF		25V
C405	1-164-156-11	CERAMIC CHIP	0.1uF		25V
C406	1-162-970-11	CERAMIC CHIP	0.01uF	10%	25V
C407	1-164-156-11	CERAMIC CHIP	0.1uF		25V
C409	1-164-156-11	CERAMIC CHIP	0.1uF		25V
C410	1-126-206-11	ELECT CHIP	100uF	20%	6.3V
C411	1-117-720-11	CERAMIC CHIP	4.7uF		10V
C412	1-162-964-11	CERAMIC CHIP	0.001uF	10%	50V
C490	1-164-156-11	CERAMIC CHIP	0.1uF		25V
C501	1-128-795-11	ELECT CHIP	470PF	10%	630V
C502	1-164-156-11	CERAMIC CHIP	0.1uF		25V
C503	1-164-156-11	CERAMIC CHIP	0.1uF		25V
C504	1-117-370-11	CERAMIC CHIP	10uF		10V
C505	1-126-206-11	ELECT CHIP	100uF	20%	6.3V
C550	1-135-349-21	ELECT CHIP	22uF	20%	20V
C701	1-164-156-11	CERAMIC CHIP	0.1uF		25V
C702	1-117-720-11	CERAMIC CHIP	4.7uF		10V
C703	1-164-156-11	CERAMIC CHIP	0.1uF		25V
C704	1-165-176-11	CERAMIC CHIP	0.047uF	10%	16V
C801	1-162-918-11	CERAMIC CHIP	18PF	5%	50V
C802	1-162-917-11	CERAMIC CHIP	15PF	5%	50V
C803	1-164-156-11	CERAMIC CHIP	0.1uF		25V
C809	1-117-720-11	CERAMIC CHIP	4.7uF		10V
C901	1-126-206-11	ELECT CHIP	100uF	20%	6.3V
C902	1-164-156-11	CERAMIC CHIP	0.1uF		25V
C903	1-126-206-11	ELECT CHIP	100uF	20%	6.3V
C904	1-164-156-11	CERAMIC CHIP	0.1uF		25V
C905	1-126-206-11	ELECT CHIP	100uF	20%	6.3V
C907	1-162-970-11	CERAMIC CHIP	0.01uF	10%	25V
C908	1-117-370-11	CERAMIC CHIP	10uF		10V
C909	1-104-852-11	TANTALUM CHIP	22uF	20%	10V
C911	1-162-970-11	CERAMIC CHIP	0.01uF	10%	25V
C998	1-164-156-11	CERAMIC CHIP	0.1uF		25V
C999	1-164-156-11	CERAMIC CHIP	0.1uF		25V
C1102	1-164-156-11	CERAMIC CHIP	0.1uF		25V
		< CONNECTOR >			
CN101	1-766-833-21	CONNECTOR, FFC/FPC (ZIF) 21P			
CN102	1-784-835-21	CONNECTOR, FFC (LIF (NON-ZIF)) 27P			
CN103	1-784-869-21	CONNECTOR, FFC (LIF (NON-ZIF)) 17P			
* CN104	1-580-055-21	PIN, CONNECTOR (SMD) 2P			
CN105	1-784-859-21	CONNECTOR, FFC (LIF (NON-ZIF)) 7P			
		< DIODE >			
D101	8-719-988-61	DIODE 1SS355TE-17			
D501	8-719-046-86	DIODE F1J6TP			
D502	8-719-046-86	DIODE F1J6TP			
		< IC >			
IC101	8-752-080-95	IC CXA2523AR			
IC152	6-700-052-01	IC MSM51V17400F-50TS-K			
IC181	8-759-481-17	IC MC74ACT08DTR2			
☆ IC195	————	IC BR24C16F-E2			
IC201	8-752-414-89	IC CXD2664R			

☆ IC195 is written in and settled EEPROM. Supply with a single article has not been carried out. In case you exchange by BD (MD) board (A-4727-928-A), please put on IC195 currently used with the model again.

Downloaded from www.Manualslib.com manuals search engine

BD (MD)

Ref. No.	Part No.	Description				Remark
IC401	8-759-836-79	IC BH6519FS-E2				
IC701	8-759-473-51	IC TLV2361CDBV				
IC803	6-701-793-01	IC CY24115-2SCT				
IC926	8-759-835-63	IC NJM2391DL1-26 (TE1)				
IC933	8-759-460-72	IC BA033FP-E2				
		< FERRITE BEAD >				
L8	1-414-760-21	FERRITE	0uH			
L10	1-469-981-21	FERRITE	0uH			
L122	1-414-760-21	FERRITE	0uH			
L201	1-414-760-21	FERRITE	0uH			
L202	1-469-981-21	FERRITE	0uH			
L203	1-414-760-21	FERRITE	0uH			
L401	1-400-050-11	FERRITE	0uH			
L402	1-400-050-11	FERRITE	0uH			
L501	1-400-050-11	FERRITE	0uH			
L502	1-400-050-11	FERRITE	0uH			
L550	1-414-760-21	FERRITE	0uH			
L601	1-469-981-21	FERRITE	0uH			
L602	1-469-981-21	FERRITE	0uH			
L603	1-414-760-21	FERRITE	0uH			
L701	1-414-760-21	FERRITE	0uH			
L801	1-414-760-21	FERRITE	0uH			
* L899	1-500-282-11	FERRITE	0uH			
		< TRANSISTOR >				
Q181	8-729-048-87	FET	2SJ518AZTR			
Q182	8-729-048-88	FET	2SK2788VYTR			
Q201	8-729-403-35	TRANSISTOR	UN5113-TX			
Q202	8-729-101-07	TRANSISTOR	2SB798-T1DK			
Q203	8-729-403-35	TRANSISTOR	UN5113-TX			
Q701	8-729-402-93	TRANSISTOR	UN5214-TX			
Q702	8-729-903-10	TRANSISTOR	FMW1-T-148			
Q703	8-729-402-93	TRANSISTOR	UN5214-TX			
Q704	8-729-026-53	TRANSISTOR	2SA1576A-T106-QR			
		< RESISTOR >				
R101	1-216-298-00	METAL CHIP	2.2	5%	1/10W	
R102	1-219-724-11	METAL CHIP	1	1%	1/4W	
R103	1-216-829-11	METAL CHIP	4.7K	5%	1/10W	
R104	1-216-853-11	METAL CHIP	470K	5%	1/10W	
R105	1-216-863-11	METAL CHIP	3.3M	5%	1/10W	
R106	1-216-845-11	METAL CHIP	100K	5%	1/10W	
R107	1-216-819-11	METAL CHIP	680	5%	1/10W	
R108	1-216-825-11	METAL CHIP	2.2K	5%	1/10W	
R109	1-216-829-11	METAL CHIP	4.7K	5%	1/10W	
R110	1-216-853-11	METAL CHIP	470K	5%	1/10W	
R111	1-216-833-11	METAL CHIP	10K	5%	1/10W	
R112	1-216-845-11	METAL CHIP	100K	5%	1/10W	
R113	1-216-833-11	METAL CHIP	10K	5%	1/10W	
R114	1-216-829-11	METAL CHIP	4.7K	5%	1/10W	
R115	1-216-833-11	METAL CHIP	10K	5%	1/10W	
R116	1-216-827-11	METAL CHIP	3.3K	5%	1/10W	
R117	1-216-845-11	METAL CHIP	100K	5%	1/10W	
R118	1-216-825-11	METAL CHIP	2.2K	5%	1/10W	
R119	1-216-837-11	METAL CHIP	22K	5%	1/10W	
R120	1-216-839-11	METAL CHIP	33K	5%	1/10W	
R121	1-216-825-11	METAL CHIP	2.2K	5%	1/10W	
R122	1-216-833-11	METAL CHIP	10K	5%	1/10W	
R201	1-216-815-11	METAL CHIP	330	5%	1/10W	
R202	1-216-819-11	METAL CHIP	680	5%	1/10W	
R203	1-216-809-11	METAL CHIP	100	5%	1/10W	
R205	1-216-833-11	METAL CHIP	10K	5%	1/10W	
R206	1-216-833-11	METAL CHIP	10K	5%	1/10W	
R207	1-216-811-11	METAL CHIP	150	5%	1/10W	
R208	1-216-821-11	METAL CHIP	1K	5%	1/10W	
R209	1-216-815-11	METAL CHIP	330	5%	1/10W	
R210	1-216-839-11	METAL CHIP	33K	5%	1/10W	
R211	1-216-857-11	METAL CHIP	1M	5%	1/10W	
R212	1-216-851-11	METAL CHIP	330K	5%	1/10W	
R214	1-216-845-11	METAL CHIP	100K	5%	1/10W	
R216	1-216-864-11	SHORT CHIP	0			
R217	1-216-833-11	METAL CHIP	10K	5%	1/10W	
R218	1-216-864-11	SHORT CHIP	0			
R219	1-216-809-11	METAL CHIP	100	5%	1/10W	
R223	1-216-833-11	METAL CHIP	10K	5%	1/10W	
R280	1-216-821-11	METAL CHIP	1K	5%	1/10W	
R298	1-216-809-11	METAL CHIP	100	5%	1/10W	
R299	1-216-864-11	SHORT CHIP	0			
R301	1-216-833-11	METAL CHIP	10K	5%	1/10W	
R302	1-216-833-11	METAL CHIP	10K	5%	1/10W	
R303	1-216-833-11	METAL CHIP	10K	5%	1/10W	
R501	1-216-295-00	SHORT CHIP	0			
R551	1-216-841-11	METAL CHIP	47K	5%	1/10W	
R552	1-216-841-11	METAL CHIP	47K	5%	1/10W	
R553	1-216-841-11	METAL CHIP	47K	5%	1/10W	
R701	1-216-821-11	METAL CHIP	1K	5%	1/10W	
R702	1-216-821-11	METAL CHIP	1K	5%	1/10W	
R703	1-216-821-11	METAL CHIP	1K	5%	1/10W	
R704	1-216-839-11	METAL CHIP	33K	5%	1/10W	
R705	1-216-829-11	METAL CHIP	4.7K	5%	1/10W	
R706	1-218-855-11	METAL CHIP	2.2K	0.5%	1/10W	
R707	1-218-863-11	METAL CHIP	4.7K	0.5%	1/10W	
R708	1-218-863-11	METAL CHIP	4.7K	0.5%	1/10W	
R709	1-218-855-11	METAL CHIP	2.2K	0.5%	1/10W	
R710	1-218-887-11	METAL CHIP	47K	0.5%	1/10W	
R711	1-216-833-11	METAL CHIP	10K	5%	1/10W	
R712	1-216-809-11	METAL CHIP	100	5%	1/10W	
R713	1-216-833-11	METAL CHIP	10K	5%	1/10W	
R801	1-216-857-11	METAL CHIP	1M	5%	1/10W	
R803	1-216-864-11	SHORT CHIP	0			
R805	1-216-807-11	METAL CHIP	68	5%	1/10W	
R810	1-216-823-11	METAL CHIP	1.5K	5%	1/10W	
R812	1-216-864-11	SHORT CHIP	0			
R814	1-216-864-11	SHORT CHIP	0			
R999	1-216-864-11	SHORT CHIP	0			
		< SWITCH >				
S101	1-762-596-21	SWITCH, PUSH (1 KEY) (LIMIT IN)				
S103	1-771-956-21	SWITCH, PUSH (1 KEY) (OUT)				
S104	1-771-955-21	SWITCH, PUSH (1 KEY) (PLAY)				
S105	1-771-955-21	SWITCH, PUSH (1 KEY) (REC)				

Downloaded from www.Manualslib.com manuals search engine

BD (MD) **CD-EJECT** **CD-SW** **DISPLAY**

Ref. No.	Part No.	Description			Remark
		< VIBRATOR >			
X804	1-795-535-21	VIBRATOR, CRYSTAL (11.2896MHz)			
**********					
	1-687-906-11	CD-EJECT BOARD			
		**********			
		< SWITCH >			
S1701	1-762-875-21	SWITCH, KEYBOARD (OPEN/CLOSE)			
**********					
	1-687-903-11	CD-SW BOARD			
		**********			
		< CAPACITOR >			
C720	1-164-159-11	CERAMIC	0.1uF		50V
		< RESISTOR >			
R708	1-249-429-11	CARBON	10K	5%	1/4W
R725	1-249-415-11	CARBON	680	5%	1/4W
R726	1-249-417-11	CARBON	1K	5%	1/4W
R727	1-249-419-11	CARBON	1.5K	5%	1/4W
R728	1-249-421-11	CARBON	2.2K	5%	1/4W
R729	1-249-425-11	CARBON	4.7K	5%	1/4W
		< SWITCH >			
S725	1-762-875-21	SWITCH, KEYBOARD (PLAY MODE (CD))			
S726	1-762-875-21	SWITCH, KEYBOARD (TIME (CD))			
S727	1-762-875-21	SWITCH, KEYBOARD (■ (CD))			
S728	1-762-875-21	SWITCH, KEYBOARD (❚❚ (CD))			
S729	1-762-875-21	SWITCH, KEYBOARD (▷ (CD))			
**********					
	A-4732-471-A	DISPLAY BOARD, COMPLETE			
		**********			
	4-949-935-41	CUSHION (FL)			
*	4-996-686-03	HOLDER (FL)			
		< CAPACITOR >			
C742	1-124-584-00	ELECT	100uF	20%	10V
C743	1-164-159-11	CERAMIC	0.1uF		50V
C750	1-164-159-11	CERAMIC	0.1uF		50V
C751	1-124-261-00	ELECT	10uF	20%	50V
C753	1-124-261-00	ELECT	10uF	20%	50V
C760	1-124-261-00	ELECT	10uF	20%	50V
C761	1-162-294-31	CERAMIC	0.001uF	10%	50V
C762	1-162-294-31	CERAMIC	0.001uF	10%	50V
C763	1-164-159-11	CERAMIC	0.1uF		50V
C764	1-124-261-00	ELECT	10uF	20%	50V
C765	1-164-159-11	CERAMIC	0.1uF		50V
C766	1-162-215-31	CERAMIC	47PF	5%	50V
C767	1-164-159-11	CERAMIC	0.1uF		50V
C768	1-162-290-31	CERAMIC	470PF	10%	50V
C769	1-162-290-31	CERAMIC	470PF	10%	50V
C770	1-162-290-31	CERAMIC	470PF	10%	50V
C780	1-164-159-11	CERAMIC	0.1uF		50V

Ref. No.	Part No.	Description			Remark
		< CONNECTOR >			
CN700	1-779-287-11	CONNECTOR, FFC (LIF (NON-ZIF)) 19P			
		< LED >			
D772	8-719-058-64	LED SEL5823A-TP15 (MDLP)			
D775	8-719-046-39	LED SEL5821A-TP15 (GROUP ON/OFF)			
		< FLUORESCENT INDICATOR TUBE >			
FL750	1-518-892-11	INDICATOR TUBE, FLUORESCENT			
		< IC >			
IC760	8-759-680-17	IC MSM9201-04GS-K			
IC781	8-759-826-33	IC NJL73H400A			
		< TRANSISTOR >			
Q726	8-729-230-45	TRANSISTOR	2SC2458TP-YGR		
Q761	8-729-620-05	TRANSISTOR	2SC2603TP-EF		
Q762	8-729-620-05	TRANSISTOR	2SC2603TP-EF		
Q772	8-729-900-80	TRANSISTOR	UN4211-TA		
Q775	8-729-900-80	TRANSISTOR	UN4211-TA		
		< RESISTOR >			
R701	1-249-409-11	CARBON	220	5%	1/4W
R702	1-249-411-11	CARBON	330	5%	1/4W
R703	1-249-413-11	CARBON	470	5%	1/4W
R704	1-249-415-11	CARBON	680	5%	1/4W
R705	1-247-807-31	CARBON	100	5%	1/4W
R709	1-247-807-31	CARBON	100	5%	1/4W
R711	1-249-409-11	CARBON	220	5%	1/4W
R712	1-249-411-11	CARBON	330	5%	1/4W
R713	1-249-413-11	CARBON	470	5%	1/4W
R714	1-249-415-11	CARBON	680	5%	1/4W
R715	1-249-417-11	CARBON	1K	5%	1/4W
R716	1-249-419-11	CARBON	1.5K	5%	1/4W
R717	1-249-421-11	CARBON	2.2K	5%	1/4W
R718	1-249-425-11	CARBON	4.7K	5%	1/4W
R719	1-249-429-11	CARBON	10K	5%	1/4W
R721	1-249-417-11	CARBON	1K	5%	1/4W
R722	1-249-409-11	CARBON	220	5%	1/4W
R723	1-249-411-11	CARBON	330	5%	1/4W
R724	1-249-413-11	CARBON	470	5%	1/4W
R741	1-247-807-31	CARBON	100	5%	1/4W
R742	1-249-401-11	CARBON	47	5%	1/4W
R761	1-247-807-31	CARBON	100	5%	1/4W
R762	1-247-807-31	CARBON	100	5%	1/4W
R763	1-249-441-11	CARBON	100K	5%	1/4W
R764	1-249-441-11	CARBON	100K	5%	1/4W
R766	1-247-843-11	CARBON	3.3K	5%	1/4W
R767	1-247-807-31	CARBON	100	5%	1/4W
R768	1-247-807-31	CARBON	100	5%	1/4W
R769	1-247-807-31	CARBON	100	5%	1/4W
R770	1-247-807-31	CARBON	100	5%	1/4W
R775	1-247-807-31	CARBON	100	5%	1/4W
		< VARIABLE RESISTOR >			
RV780	1-223-673-11	RES, VAR, CARBON 10K (REC LEVEL)			

Downloaded from www.Manualslib.com manuals search engine

DISPLAY | HP | LOADING | MAIN

Ref. No.	Part No.	Description			Remark
		< SWITCH/ROTARY ENCODER >			
S700	1-762-875-21	SWITCH, KEYBOARD (REC ●)			
S701	1-762-875-21	SWITCH, KEYBOARD (INPUT)			
S702	1-762-875-21	SWITCH, KEYBOARD (REC MODE)			
S703	1-762-875-21	SWITCH, KEYBOARD (GROUP SKIP)			
S704	1-762-875-21	SWITCH, KEYBOARD (GROUP ON/OFF)			
S710	1-762-875-21	SWITCH, KEYBOARD (▷ (MD))			
S711	1-762-875-21	SWITCH, KEYBOARD (❚❚ (MD))			
S712	1-762-875-21	SWITCH, KEYBOARD (■ (MD))			
S713	1-762-875-21	SWITCH, KEYBOARD (PLAY MODE (MD))			
S714	1-762-875-21	SWITCH, KEYBOARD (TIME (MD))			
S715	1-762-875-21	SWITCH, KEYBOARD (DISPLAY)			
S716	1-762-875-21	SWITCH, KEYBOARD (YES)			
S717	1-475-235-21	ENCODER, ROTARY (⏮ AMS ⏭ (MD))			
S718	1-762-875-21	SWITCH, KEYBOARD (MENU/NO)			
S719	1-762-875-21	SWITCH, KEYBOARD (CLEAR)			
S720	1-762-875-21	SWITCH, KEYBOARD (EJECT)			
S721	1-762-875-21	SWITCH, KEYBOARD (CD SYNCRO NORMAL)			
S722	1-762-875-21	SWITCH, KEYBOARD (CD SYNCRO HIGH)			
S723	1-475-235-21	ENCODER, ROTARY (⏮ AMS ⏭ (CD))			
S724	1-762-875-21	SWITCH, KEYBOARD (ALBUM)			
**********					
	1-687-904-11	HP BOARD *********			
		< CAPACITOR >			
C791	1-162-290-31	CERAMIC	470PF	10%	50V
C796	1-162-290-31	CERAMIC	470PF	10%	50V
		< JACK >			
J790	1-770-307-11	JACK (LARGE TYPE) (PHONES)			
		< COIL >			
L790	1-412-473-21	INDUCTOR	0uH		
L1790	1-412-473-21	INDUCTOR	0uH		
		< RESISTOR >			
R791	1-249-393-11	CARBON	10	5%	1/4W
R796	1-249-393-11	CARBON	10	5%	1/4W
		< VARIABLE RESISTOR >			
RV790	1-225-741-11	RES, VAR, CARBON 20K/20K (PHONE LEVEL)			
**********					
	1-645-721-11	LOADING BOARD **********			
		< CONNECTOR >			
* CN151	1-568-943-11	PIN, CONNECTOR 5P			
		< SWITCH >			
S271	1-572-086-11	SWITCH, LEAF (LOADING OUT)			
S272	1-572-086-11	SWITCH, LEAF (LOADING IN)			
**********					

Ref. No.	Part No.	Description			Remark
	A-4732-635-A	MAIN BOARD, COMPLETE **********			
	1-766-806-11	HOUSING, CONNECTOR 3P			
	7-685-871-01	SCREW +BVTT 3X6 (S)			
		< BATTERY >			
BT1	1-756-121-11	BATTERY, LITHIUM SECONDARY			
		< CAPACITOR >			
C1	1-126-936-11	ELECT	3300uF	20%	16V
C2	1-164-156-11	CERAMIC CHIP	0.1uF		25V
C3	1-126-933-11	ELECT	100uF	20%	16V
C4	1-164-156-11	CERAMIC CHIP	0.1uF		25V
C5	1-164-156-11	CERAMIC CHIP	0.1uF		25V
C6	1-164-156-11	CERAMIC CHIP	0.1uF		25V
C7	1-126-935-11	ELECT	470uF	20%	10V
C8	1-164-156-11	CERAMIC CHIP	0.1uF		25V
C9	1-164-156-11	CERAMIC CHIP	0.1uF		25V
C10	1-164-156-11	CERAMIC CHIP	0.1uF		25V
C11	1-164-156-11	CERAMIC CHIP	0.1uF		25V
C12	1-162-974-11	CERAMIC CHIP	0.01uF		50V
C13	1-164-156-11	CERAMIC CHIP	0.1uF		25V
C14	1-164-156-11	CERAMIC CHIP	0.1uF		25V
C15	1-164-156-11	CERAMIC CHIP	0.1uF		25V
C16	1-164-156-11	CERAMIC CHIP	0.1uF		25V
C17	1-126-941-11	ELECT	470uF	20%	25V
C18	1-126-941-11	ELECT	470uF	20%	25V
C19	1-164-156-11	CERAMIC CHIP	0.1uF		25V
C20	1-164-156-11	CERAMIC CHIP	0.1uF		25V
C21	1-164-156-11	CERAMIC CHIP	0.1uF		25V
C22	1-164-156-11	CERAMIC CHIP	0.1uF		25V
C23	1-115-364-11	ELECT	22000uF	20%	16V
C24	1-164-156-11	CERAMIC CHIP	0.1uF		25V
C25	1-164-156-11	CERAMIC CHIP	0.1uF		25V
C26	1-126-947-11	ELECT	47uF	20%	16V
C27	1-126-939-11	ELECT	10000uF	20%	16V
C28	1-126-952-11	ELECT	1000uF	20%	35V
C29	1-164-156-11	CERAMIC CHIP	0.1uF		25V
C30	1-164-156-11	CERAMIC CHIP	0.1uF		25V
C31	1-128-576-11	ELECT	100uF	20%	63V
C32	1-126-963-11	ELECT	4.7uF	20%	50V
C33	1-164-156-11	CERAMIC CHIP	0.1uF		25V
C34	1-164-156-11	CERAMIC CHIP	0.1uF		25V
C35	1-164-156-11	CERAMIC CHIP	0.1uF		25V
C36	1-164-156-11	CERAMIC CHIP	0.1uF		25V
C37	1-104-666-11	ELECT	220uF	20%	25V
C38	1-165-319-11	CERAMIC CHIP	0.1uF		50V
C39	1-126-926-11	ELECT	1000uF	20%	10V
C40	1-126-966-11	ELECT	33uF	20%	50V
C41	1-104-665-11	ELECT	100uF	20%	10V
C42	1-126-935-11	ELECT	470uF	20%	10V
C43	1-164-156-11	CERAMIC CHIP	0.1uF		25V
C47	1-164-156-11	CERAMIC CHIP	0.1uF		25V
C48	1-162-927-11	CERAMIC CHIP	100PF	5%	50V
C49	1-162-927-11	CERAMIC CHIP	100PF	5%	50V
C50	1-164-156-11	CERAMIC CHIP	0.1uF		25V
C51	1-164-156-11	CERAMIC CHIP	0.1uF		25V

Downloaded from www.Manualslib.com manuals search engine

MAIN

Ref. No.	Part No.	Description			Remark
C52	1-164-156-11	CERAMIC CHIP	0.1uF		25V
C53	1-126-934-11	ELECT	220uF	20%	10V
C54	1-126-963-11	ELECT	4.7uF	20%	50V
C55	1-104-665-11	ELECT	100uF	20%	10V
C56	1-164-156-11	CERAMIC CHIP	0.1uF		25V
C58	1-164-156-11	CERAMIC CHIP	0.1uF		25V
C59	1-126-916-11	ELECT	1000uF	20%	6.3V
C63	1-164-156-11	CERAMIC CHIP	0.1uF		25V
C64	1-162-964-11	CERAMIC CHIP	0.001uF	10%	50V
C65	1-162-964-11	CERAMIC CHIP	0.001uF	10%	50V
C66	1-164-156-11	CERAMIC CHIP	0.1uF		25V
C69	1-164-360-11	CERAMIC CHIP	0.1uF		16V
C70	1-126-933-11	ELECT	100uF	20%	16V
C71	1-126-933-11	ELECT	100uF	20%	16V
C72	1-126-933-11	ELECT	100uF	20%	16V
C73	1-164-360-11	CERAMIC CHIP	0.1uF		16V
C74	1-164-156-11	CERAMIC CHIP	0.1uF		25V
C75	1-162-974-11	CERAMIC CHIP	0.01uF		50V
C76	1-164-156-11	CERAMIC CHIP	0.1uF		25V
C79	1-126-933-11	ELECT	100uF	20%	16V
C80	1-162-974-11	CERAMIC CHIP	0.01uF		50V
C82	1-164-156-11	CERAMIC CHIP	0.1uF		25V
C83	1-126-933-11	ELECT	100uF	20%	16V
C84	1-164-156-11	CERAMIC CHIP	0.1uF		25V
C85	1-164-156-11	CERAMIC CHIP	0.1uF		25V
C86	1-126-933-11	ELECT	100uF	20%	16V
C87	1-164-156-11	CERAMIC CHIP	0.1uF		25V
C88	1-164-156-11	CERAMIC CHIP	0.1uF		25V
C89	1-164-156-11	CERAMIC CHIP	0.1uF		25V
C90	1-126-933-11	ELECT	100uF	20%	16V
C91	1-164-156-11	CERAMIC CHIP	0.1uF		25V
C92	1-164-156-11	CERAMIC CHIP	0.1uF		25V
C93	1-126-933-11	ELECT	100uF	20%	16V
C94	1-164-156-11	CERAMIC CHIP	0.1uF		25V
C95	1-164-156-11	CERAMIC CHIP	0.1uF		25V
C96	1-126-933-11	ELECT	100uF	20%	16V
C97	1-164-156-11	CERAMIC CHIP	0.1uF		25V
C98	1-162-927-11	CERAMIC CHIP	100PF	5%	50V
C99	1-163-233-91	CERAMIC CHIP	18PF	5%	50V
C100	1-163-233-91	CERAMIC CHIP	18PF	5%	50V
C101	1-165-319-11	CERAMIC CHIP	0.1uF		50V
C102	1-162-964-11	CERAMIC CHIP	0.001uF	10%	50V
C103	1-162-927-11	CERAMIC CHIP	100PF	5%	50V
C104	1-164-156-11	CERAMIC CHIP	0.1uF		25V
C106	1-104-665-11	ELECT	100uF	20%	10V
C107	1-126-791-11	ELECT	10uF	20%	16V
C108	1-164-156-11	CERAMIC CHIP	0.1uF		25V
C109	1-164-156-11	CERAMIC CHIP	0.1uF		25V
C110	1-128-551-11	ELECT	22uF	20%	25V
C111	1-128-551-11	ELECT	22uF	20%	25V
C113	1-128-551-11	ELECT	22uF	20%	25V
C114	1-128-551-11	ELECT	22uF	20%	25V
C115	1-164-156-11	CERAMIC CHIP	0.1uF		25V
C116	1-164-156-11	CERAMIC CHIP	0.1uF		25V
C117	1-164-156-11	CERAMIC CHIP	0.1uF		25V
C118	1-126-933-11	ELECT	100uF	20%	16V
C119	1-126-933-11	ELECT	100uF	20%	16V
C120	1-126-963-11	ELECT	4.7uF	20%	50V
C121	1-126-947-11	ELECT	47uF	20%	25V
C122	1-126-947-11	ELECT	47uF	20%	25V
C123	1-164-156-11	CERAMIC CHIP	0.1uF		25V
C124	1-164-156-11	CERAMIC CHIP	0.1uF		25V
C126	1-162-927-11	CERAMIC CHIP	100PF	5%	50V
C127	1-128-551-11	ELECT	22uF	20%	25V
C128	1-128-551-11	ELECT	22uF	20%	25V
C129	1-136-356-11	MYLAR	470PF	5%	50V
C130	1-136-356-11	MYLAR	470PF	5%	50V
C131	1-164-156-11	CERAMIC CHIP	0.1uF		25V
C132	1-164-156-11	CERAMIC CHIP	0.1uF		25V
C133	1-128-551-11	ELECT	22uF	20%	25V
C134	1-136-356-11	MYLAR	470PF	5%	50V
C135	1-126-933-11	ELECT	100uF	20%	16V
C136	1-126-933-11	ELECT	100uF	20%	16V
C137	1-136-356-11	MYLAR	470PF	5%	50V
C138	1-128-551-11	ELECT	22uF	20%	25V
C139	1-126-933-11	ELECT	100uF	20%	16V
C140	1-164-156-11	CERAMIC CHIP	0.1uF		25V
C141	1-162-974-11	CERAMIC CHIP	0.01uF		50V
C142	1-164-156-11	CERAMIC CHIP	0.1uF		25V
C143	1-164-156-11	CERAMIC CHIP	0.1uF		25V
C145	1-164-156-11	CERAMIC CHIP	0.1uF		25V
C146	1-164-156-11	CERAMIC CHIP	0.1uF		25V
C147	1-164-156-11	CERAMIC CHIP	0.1uF		25V
C149	1-162-964-11	CERAMIC CHIP	0.001uF	10%	50V
		< CONNECTOR >			
CN1	1-506-469-11	PIN, CONNECTOR 4P			
CN2	1-691-771-11	PLUG (MICRO CONNECTOR) 9P			
CN3	1-784-367-11	CONNECTOR, FFC/FPC 8P			
CN4	1-784-368-11	CONNECTOR, FFC/FPC 9P			
CN5	1-784-382-21	CONNECTOR, FFC/FPC 25P			
* CN6	1-568-954-11	PIN, CONNECTOR 5P			
CN7	1-568-683-11	PIN, CONNECTOR (PC BAORD) 2P			
CN8	1-784-367-11	CONNECTOR, FFC/FPC 8P			
CN9	1-784-376-11	CONNECTOR, FFC/FPC 17P			
CN10	1-784-384-11	CONNECTOR, FFC/FPC 27P			
CN11	1-778-691-11	CONNECTOR, FFC/FPC 19P			
CN12	1-506-468-11	PIN, CONNECTOR 3P			
		< DIODE >			
D1	8-719-975-40	DIODE RB411D-T146			
D2	8-719-975-40	DIODE RB411D-T146			
D3	8-719-975-40	DIODE RB411D-T146			
D4	8-719-975-40	DIODE RB411D-T146			
D5	8-719-421-18	DIODE MA8033-L-TX			
D6	6-500-522-21	DIODE 10EDB40-TB3			
D7	6-500-522-21	DIODE 10EDB40-TB3			
D8	6-500-522-21	DIODE 10EDB40-TB3			
D9	6-500-522-21	DIODE 10EDB40-TB3			
D10	6-500-522-21	DIODE 10EDB40-TB3			
D11	6-500-522-21	DIODE 10EDB40-TB3			
D12	6-500-522-21	DIODE 10EDB40-TB3			
D13	6-500-522-21	DIODE 10EDB40-TB3			
D14	6-500-522-21	DIODE 10EDB40-TB3			

Downloaded from www.Manualslib.com manuals search engine

MAIN

Ref. No.	Part No.	Description	Remark
D15	6-500-522-21	DIODE 10EDB40-TB3	
D16	6-500-522-21	DIODE 10EDB40-TB3	
D17	6-500-522-21	DIODE 10EDB40-TB3	
D18	6-500-522-21	DIODE 10EDB40-TB3	
D20	8-719-423-07	DIODE MA8100-L-TX	
D21	8-719-988-61	DIODE 1SS355TE-17	
D22	8-719-988-61	DIODE 1SS355TE-17	
D23	8-719-074-34	DIODE RB495D-T146	
D24	8-719-421-82	DIODE MA8043-M (TX)	
D25	8-719-820-05	DIODE 1SS181-TE85L	
D26	8-719-801-78	DIODE 1SS184-TE85L	
D27	8-719-988-61	DIODE 1SS355TE-17	
D28	8-719-820-05	DIODE 1SS181-TE85L	
D29	8-719-988-61	DIODE 1SS355TE-17	
D30	8-719-988-61	DIODE 1SS355TE-17	
		< FERRITE BEAD >	
FB1	1-469-324-21	FERRITE 0uH	
FB2	1-469-324-21	FERRITE 0uH	
		< IC >	
IC1	8-759-647-10	IC uPC2933HF	
IC2	6-702-913-01	IC S-80929CNMC-G8Z-T2	
IC3	8-759-633-42	IC M5293L	
IC4	8-759-982-07	IC NJM7808FA	
IC5	8-759-039-69	IC uPC7805AHF	
IC6	6-803-005-01	IC M30624MGN-B20FP	
IC7	8-759-678-77	IC LA5643	
IC8	8-759-548-57	IC SN74LV00ANSR	
IC9	8-759-647-10	IC uPC2933HF	
IC10	8-759-822-09	IC LB1641	
IC11	6-701-843-01	IC AK4584VQ	
IC12	6-803-006-01	IC M30624MGN-A23FP	
IC13	8-759-278-58	IC NJM4558V-TE2	
IC14	8-749-017-80	IC GP1FA551TZ (DIGITAL OPTICAL OUTPUT)	
IC15	6-600-006-01	IC GP1FA551RZ (DIGITAL OPTICAL INPUT)	
IC16	8-759-278-58	IC NJM4558V-TE2	
IC17	8-759-697-21	IC NJM4565V (TE2)	
IC18	8-759-822-09	IC LB1641	
IC19	8-759-196-96	IC TC7SH08FU-TE85R	
		< JACK >	
J1	1-784-429-11	JACK, PIN 4P (ANALOG INPUT/OUTPUT)	
		< SHORT >	
JR101	1-216-296-00	SHORT CHIP 0	
		< COIL/SHORT >	
L1	1-414-234-22	FERRITE 0uH	
L2	1-414-234-22	FERRITE 0uH	
L3	1-414-234-22	FERRITE 0uH	
L5	1-216-864-11	SHORT CHIP 0	
L6	1-216-864-11	SHORT CHIP 0	
L7	1-216-296-00	SHORT CHIP 0	
L8	1-414-234-22	FERRITE 0uH	
L9	1-414-267-21	INDUCTOR 10uH	
L10	1-216-295-00	SHORT CHIP 0	
L11	1-216-295-00	SHORT CHIP 0	
		< TRANSISTOR >	
Q1	8-729-230-91	TRANSISTOR 2SD2144S-TP-W	
Q2	8-729-421-22	TRANSISTOR UN2211-TX	
Q3	8-729-015-74	TRANSISTOR UN5111-TX	
Q4	8-729-922-37	TRANSISTOR 2SD2144S-TP-UVW	
Q5	8-729-046-97	TRANSISTOR 2SD1938 (F) -T (TX).SO	
Q6	8-729-046-97	TRANSISTOR 2SD1938 (F) -T (TX).SO	
Q7	8-729-900-80	TRANSISTOR UN4211-TA	
Q8	8-729-119-76	TRANSISTOR 2SA1115TP-EF	
		< RESISTOR >	
R1	1-216-821-11	METAL CHIP 1K 5% 1/10W	
R2	1-216-821-11	METAL CHIP 1K 5% 1/10W	
R3	1-216-841-11	METAL CHIP 47K 5% 1/10W	
R4	1-216-809-11	METAL CHIP 100 5% 1/10W	
R5	1-216-845-11	METAL CHIP 100K 5% 1/10W	
R6	1-216-833-11	METAL CHIP 10K 5% 1/10W	
R7	1-216-841-11	METAL CHIP 47K 5% 1/10W	
R8	1-216-809-11	METAL CHIP 100 5% 1/10W	
R9	1-216-817-11	METAL CHIP 470 5% 1/10W	
R10	1-216-809-11	METAL CHIP 100 5% 1/10W	
R11	1-216-809-11	METAL CHIP 100 5% 1/10W	
R12	1-216-825-11	METAL CHIP 2.2K 5% 1/10W	
R13	1-216-809-11	METAL CHIP 100 5% 1/10W	
R14	1-216-827-11	METAL CHIP 3.3K 5% 1/10W	
R15	1-216-838-11	METAL CHIP 27K 5% 1/10W	
R16	1-216-829-11	METAL CHIP 4.7K 5% 1/10W	
R17	1-216-845-11	METAL CHIP 100K 5% 1/10W	
R18	1-216-829-11	METAL CHIP 4.7K 5% 1/10W	
R19	1-216-829-11	METAL CHIP 4.7K 5% 1/10W	
R20	1-216-845-11	METAL CHIP 100K 5% 1/10W	
R21	1-216-833-11	METAL CHIP 10K 5% 1/10W	
R22	1-216-833-11	METAL CHIP 10K 5% 1/10W	
R23	1-216-845-11	METAL CHIP 100K 5% 1/10W	
R24	1-216-833-11	METAL CHIP 10K 5% 1/10W	
R25	1-216-826-11	METAL CHIP 2.7K 5% 1/10W	
R26	1-216-847-11	METAL CHIP 150K 5% 1/10W	
R27	1-216-843-11	METAL CHIP 68K 5% 1/10W	
R28	1-216-833-11	METAL CHIP 10K 5% 1/10W	
R29	1-216-833-11	METAL CHIP 10K 5% 1/10W	
R30	1-216-809-11	METAL CHIP 100 5% 1/10W	
R31	1-216-833-11	METAL CHIP 10K 5% 1/10W	
R32	1-216-833-11	METAL CHIP 10K 5% 1/10W	
R33	1-216-833-11	METAL CHIP 10K 5% 1/10W	
R34	1-216-809-11	METAL CHIP 100 5% 1/10W	
R35	1-216-845-11	METAL CHIP 100K 5% 1/10W	
R36	1-216-813-11	METAL CHIP 220 5% 1/10W	
R37	1-216-833-11	METAL CHIP 10K 5% 1/10W	
R38	1-216-833-11	METAL CHIP 10K 5% 1/10W	
R39	1-216-833-11	METAL CHIP 10K 5% 1/10W	
R40	1-216-833-11	METAL CHIP 10K 5% 1/10W	
R41	1-216-833-11	METAL CHIP 10K 5% 1/10W	
R43	1-216-845-11	METAL CHIP 100K 5% 1/10W	
R44	1-216-864-11	SHORT CHIP 0	
R45	1-216-809-11	METAL CHIP 100 5% 1/10W	
R46	1-216-809-11	METAL CHIP 100 5% 1/10W	

Downloaded from www.Manualslib.com manuals search engine

MAIN | POWER SWITCH | TRANSFORMER

Ref. No.	Part No.	Description			Remark
R47	1-216-809-11	METAL CHIP	100	5%	1/10W
R48	1-216-809-11	METAL CHIP	100	5%	1/10W
R49	1-216-809-11	METAL CHIP	100	5%	1/10W
R50	1-216-809-11	METAL CHIP	100	5%	1/10W
R51	1-216-864-11	SHORT CHIP	0		
R52	1-216-864-11	SHORT CHIP	0		
R54	1-216-864-11	SHORT CHIP	0		
R55	1-216-834-11	METAL CHIP	12K	5%	1/10W
R56	1-216-809-11	METAL CHIP	100	5%	1/10W
R57	1-216-833-11	METAL CHIP	10K	5%	1/10W
R58	1-216-833-11	METAL CHIP	10K	5%	1/10W
R59	1-216-829-11	METAL CHIP	4.7K	5%	1/10W
R60	1-216-864-11	SHORT CHIP	0		
R61	1-216-864-11	SHORT CHIP	0		
R62	1-216-845-11	METAL CHIP	100K	5%	1/10W
R63	1-216-845-11	METAL CHIP	100K	5%	1/10W
R64	1-216-833-11	METAL CHIP	10K	5%	1/10W
R65	1-216-805-11	METAL CHIP	47	5%	1/10W
R66	1-216-805-11	METAL CHIP	47	5%	1/10W
R67	1-216-833-11	METAL CHIP	10K	5%	1/10W
R68	1-216-833-11	METAL CHIP	10K	5%	1/10W
R69	1-216-833-11	METAL CHIP	10K	5%	1/10W
R70	1-216-833-11	METAL CHIP	10K	5%	1/10W
R71	1-216-864-11	SHORT CHIP	0		
R72	1-216-817-11	METAL CHIP	470	5%	1/10W
R73	1-216-817-11	METAL CHIP	470	5%	1/10W
R75	1-216-845-11	METAL CHIP	100K	5%	1/10W
R76	1-216-845-11	METAL CHIP	100K	5%	1/10W
R77	1-216-833-11	METAL CHIP	10K	5%	1/10W
R80	1-216-841-11	METAL CHIP	47K	5%	1/10W
R81	1-216-817-11	METAL CHIP	470	5%	1/10W
R82	1-216-825-11	METAL CHIP	2.2K	5%	1/10W
R84	1-216-817-11	METAL CHIP	470	5%	1/10W
R85	1-216-821-11	METAL CHIP	1K	5%	1/10W
R86	1-216-821-11	METAL CHIP	1K	5%	1/10W
R87	1-216-847-11	METAL CHIP	150K	5%	1/10W
R88	1-216-845-11	METAL CHIP	100K	5%	1/10W
R89	1-216-817-11	METAL CHIP	470	5%	1/10W
R90	1-216-839-11	METAL CHIP	33K	5%	1/10W
R91	1-216-837-11	METAL CHIP	22K	5%	1/10W
R92	1-216-849-11	METAL CHIP	220K	5%	1/10W
R93	1-216-849-11	METAL CHIP	220K	5%	1/10W
R94	1-216-847-11	METAL CHIP	150K	5%	1/10W
R95	1-216-837-11	METAL CHIP	22K	5%	1/10W
R96	1-216-839-11	METAL CHIP	33K	5%	1/10W
R97	1-216-835-11	METAL CHIP	15K	5%	1/10W
R98	1-216-805-11	METAL CHIP	47	5%	1/10W
R99	1-216-805-11	METAL CHIP	47	5%	1/10W
R100	1-216-833-11	METAL CHIP	10K	5%	1/10W
R103	1-216-805-11	METAL CHIP	47	5%	1/10W
R104	1-216-805-11	METAL CHIP	47	5%	1/10W
R107	1-216-833-11	METAL CHIP	10K	5%	1/10W
R108	1-216-833-11	METAL CHIP	10K	5%	1/10W
R110	1-216-833-11	METAL CHIP	10K	5%	1/10W
R111	1-216-811-11	METAL CHIP	150	5%	1/10W
R112	1-216-815-11	METAL CHIP	330	5%	1/10W
R113	1-216-864-11	SHORT CHIP	0		

Ref. No.	Part No.	Description			Remark
R200	1-216-864-11	SHORT CHIP	0		
		< COMPOSITION CIRCUIT BLOCK >			
RB1	1-236-908-11	NETWORK RESISTOR (CHIP) 10K			
RB2	1-233-418-11	RES, CHIP NETWORK 3.3K (3216)			
RB4	1-236-908-11	NETWORK RESISTOR (CHIP) 10K			
RB5	1-236-908-11	NETWORK RESISTOR (CHIP) 10K			
RB6	1-236-908-11	NETWORK RESISTOR (CHIP) 10K			
RB7	1-236-908-11	NETWORK RESISTOR (CHIP) 10K			
		< RELAY >			
RY1	1-515-622-11	RELAY			
		< VIBRATOR >			
X1	1-795-482-11	VIBRATOR, CERAMIC (16MHz)			
X2	1-795-004-21	VIBRATOR, CERAMIC (10MHz)			
X3	1-567-098-41	VIBRATOR, CRYSTAL (32.768kHz)			
**********					
	1-687-905-11	POWER SWITCH BOARD			
		**********			
		< LED >			
D726	8-719-046-44	LED SEL5221S-TP15 (STANDBY)			
		< RESISTOR >			
R706	1-247-807-31	CARBON	100	5%	1/4W
R707	1-249-435-11	CARBON	33K	5%	1/4W
		< SWITCH >			
S706	1-762-875-21	SWITCH, KEYBOARD (I/⏻)			
**********					
	1-687-901-11	TRANSFORMER BOARD			
		**********			
		< CAPACITOR >			
⚠C651	1-113-920-11	CERAMIC	0.0022uF	20%	250V
⚠C652	1-113-925-11	CERAMIC	0.01uF	20%	250V
⚠C653	1-113-925-11	CERAMIC	0.01uF	20%	250V
		< CONNECTOR >			
CN652	1-564-321-00	PIN, CONNECTOR (3.96MM PITCH) 2P			
		< DIODE >			
D651	6-500-522-11	DIODE 10EDB40-TA2B5			
		< LINE FILTER >			
⚠LF651	1-411-547-11	FILTER, LINE			
		< RELAY >			
⚠RY650	1-755-356-11	RELAY			
		< TRANSFORMER >			

The components identified by mark ⚠ or dotted line with mark ⚠ are critical for safety.
Replace only with part number specified.

Downloaded from www.Manualslib.com manuals search engine

TRANSFORMER

Ref. No.	Part No.	Description	Remark
⚠TR651	1-439-732-11	TRANSFORMER, POWER	
⚠TR652	1-437-335-11	TRANSFORMER, POWER	

****

MISCELLANEOUS
****

2	1-782-279-11	WIRE (FLAT TYPE) (25 CORE)	
3	1-782-243-11	WIRE (FLAT TYPE) (9 CORE)	
6	1-782-109-11	WIRE (FLAT TYPE) (17 CORE)	
7	1-782-244-11	WIRE (FLAT TYPE) (27 CORE)	
59	1-777-556-11	WIRE (FLAT TYPE) (19 CORE)	
⚠103	1-783-531-11	CORD, POWER	
359	1-678-514-11	FLEXIBLE BOARD	
⚠360	A-4672-976-A	OPTICAL PICK-UP (KMS-262)	
552	1-782-817-11	WIRE (FLAT TYPE) (16 CORE)	
⚠553	A-4735-885-A	BU-30B ASSY	
HR901	1-500-670-22	HEAD, OVER LIGHT	
M101	A-4735-757-A	MOTOR ASSY, SPINDLE	
M102	A-4672-900-A	MOTOR ASSY, SLED	
M103	A-4672-975-A	MOTOR ASSY, LOADING	
M151	A-4604-363-A	MOTOR (L) ASSY (LOADING)	
S102	1-771-957-11	SWITCH, PUSH (2 KEY) (REFRECT/PROTECT)	

****

ACCESSORIES
****

	1-477-841-11	COMMANDER, STANDARD (RM-D54M)
	1-790-735-12	CORD, CONNECTION (AUDIO CONNECTION CORD)
	4-228-696-01	BATTERY COVER (for RM-D54M)
	4-245-486-11	MANUAL, INSTRUCTION (ENGLISH)

The components identified by mark ⚠ or dotted line with mark ⚠ are critical for safety.
Replace only with part number specified.

Downloaded from www.Manualslib.com manuals search engine

REVISION HISTORY

Clicking the version allows you to jump to the revised page.
Also, clicking the version at the upper right on the revised page allows you to jump to the next revised page.

Ver.	Date	Description of Revision
1.0	2003.05	New

Downloaded from www.Manualslib.com manuals search engine